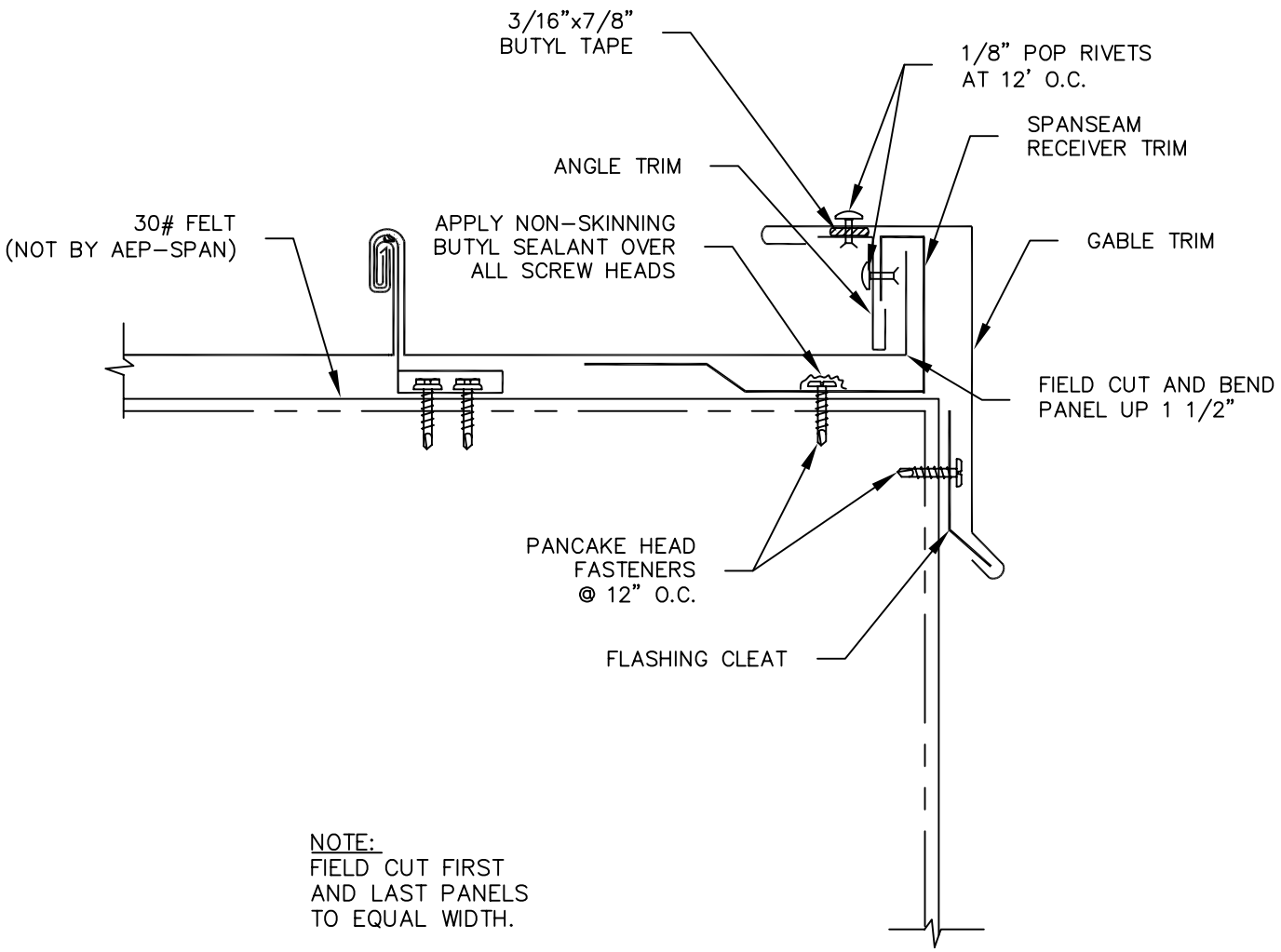

NOTE:
FIELD CUT FIRST
AND LAST PANELS
TO EQUAL WIDTH.

AEP SPAN
Engineered Solutions in Metal

SPANSEAM

GABLE

SPS-8

REV. 11/01/07