MENU

Concealed Fastener Steel Roof and Wall Panel Structural Design Guide

MENU

Table of Contents

Introduction 2-3
Concealed Fastener Panels Explained 2
Concealed Fastener Panel Systems. 2

Structural Design Requirements 4-6
IBC Recognition of Roof and Wall Panels. 4
Product Approval Reports. 4
Section Properties 4

Panel Design Loads 6-13
Design Loads 6
Application of Design Loads. 6
Deflection Limits 6
Panel Resistance to Inward (Positive) loads. 7
Panel Resistance to Outward (Negative) loads. 8
Roof Attachment (Point) Loads onto Metal Roofing 10
Photovoltaic (PV) Attachment Considerations 12
Drag Loads 12
How to Specify Product on Drawings 13

Design Examples 14-23

Introduction

Steel roof and wall panels with their attractive textures and finishes are able to provide the long term durability and environmental protection to resist the most powerful storms nature can hurl towards buildings. The attachment points of concealed fastener panels are hidden, adding to the sleek, clean look of these panels. This combined beauty and durability can easily be specified by the designer to meet a project's architectural and the structural performance requirements.

The structural design methods presented in this guide follow the International Building Code (IBC) requirements for steel roof and wall panels. This document will guide the designer through common loads applied to the panels including; dead loads, live loads, wind and snow loads. The steel panels resist these loads as a beam, acting in the plane of the roof or wall. The panel's resisting capacity for inward loads are derived through principles of engineering mechanics as a multi-span beam using the panel's section properties. The outward capacity of the panels is derived through a combination of full scale uplift testing and the fastener capacity that holds the panel to the substrate. In addition to the inward and outward out-of-plane loads, drag loads are addressed to ensure the panels will not slide off the roof. All of these basic concepts are addressed in the following sections and culminate in detailed design examples.

CONCEALED FASTENER PANELS EXPLAINED

Steel roof and wall panels fall within two categories; concealed fastener or exposed fastener panels. See Figure 1 for an example of both types. Concealed fastener panels utilize hidden clips and/or fasteners to attach the panel to the substrate. The most common types of concealed fastener panels are referred to as standing seam panels. Figure 2 shows common configurations of concealed fastener panels. In contrast, exposed fastener panels are attached to the substrate by driving a fastener directly through the panel surface leaving the fastener head exposed. Exposed fastener panels are also commonly referred to as corrugated, or through-fastened, panels.

Concealed and exposed fastener panels each provide their own unique look and texture when selected as a roof or wall covering. Concealed fastener panels provide very clean lines by eliminating the need for exposed fasteners. Concealed fastener panels are also often chosen over exposed fastener panels where weather-tightness is a concern. Environmental factors driven primarily by temperature fluctuation, causes the panel assemblies to expand and contract. For steel panels, a 1/8″ of expansion/contraction per 10′ of panel length is a common rule of thumb. With exposed fastener applications the fastener mounting hole may stretch or tear, ultimately resulting in leaks. Most concealed fastener assemblies allow for thermal expansion through the use of two-piece moveable clips, single piece clips that slide within the panel seam, or for those assemblies without clips there are usually fastener slots that will accommodate some thermal movement.

The two most prevalent concealed fastener panel types are mechanically seamed and snap together panels. Each option offers the designer a choice depending on the project's structural and aesthetic needs. Mechanically seamed panels generally have a substantially higher structural performance and better weather-tightness than snap together panels. They can be installed at very low slopes down to as low as 1/4":12. These panels require extra installation steps to produce the mechanical seam and the panels typically utilize two-piece clips with limited thermal movement. Snap together panels are generally preferred for the most visually demanding architectural applications, and are easy to install. If a panel is ever damaged they can often be readily replaced. The one-piece clips used with the snap together panels are often simple in design and provide unlimited thermal movement.

CONCEALED FASTENER PANEL SYSTEMS

Concealed fastener panels can be installed on a wide variety of substrates including, but not limited to: lumber, plywood, OSB, cold-formed steel such as Cees or Zees, steel deck, hot rolled steel beams, and even concrete or masonry. Figure 3 shows examples of common roof panel assemblies over solid substrates and over open framing.

A critical component of a properly designed panel assembly is specifying the fasteners that hold the panel or panel clip to the substrate. The nominal fastener size is generally defined by the necessary panel and clip fastener clearances. Nomi-

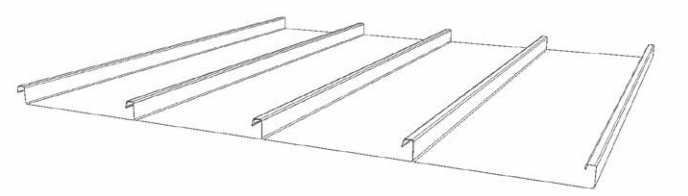

Common concealed fastener panel

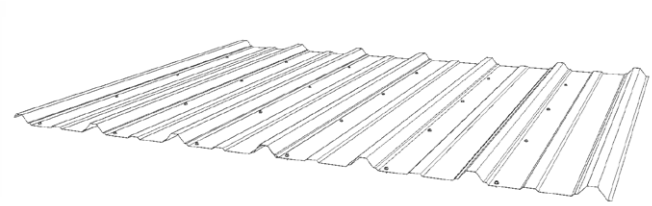

Common exposed fastener panel

Figure 1: **Common concealed vs. exposed fastener panels**

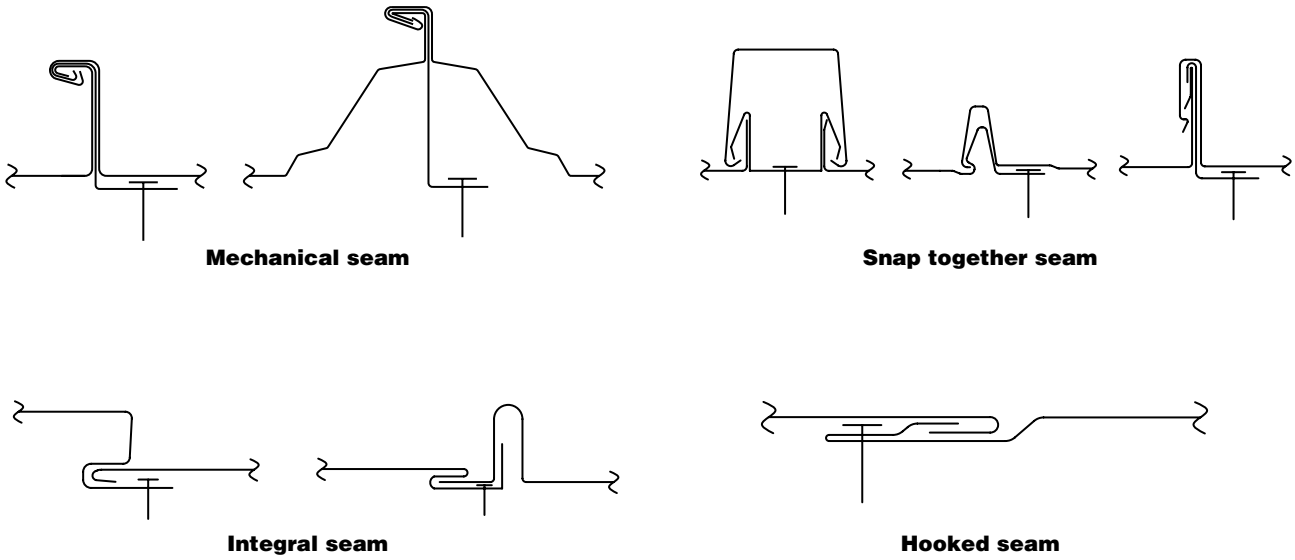

Figure 2: **Common concealed fastener panel configurations**

nal fastener sizes approved for use with each panel type are defined within a manufacturer's approval report, in their installation guide, or by contacting the panel manufacturer's representative. The fastener length, point, and thread type are defined by the underlying substrate type and thickness. Fasteners should be obtained through the panel manufacturer when possible to ensure that the appropriate fastener is being used and the overall panel assembly capacities have not been jeopardized.

For additional information on panel system components and installation considerations and guidelines, it is advisable to review the manufacturer's installation guides and other product literature; this information is nearly always available on the manufacturer's website. Installation guides recommend standard roof and wall flashing details for aesthetics and weather resistance. Manufacturers often provide additional information around storage/handling, oil canning, underlayments, attachments, drag loads, thermal movement, as well as other considerations.

Designing concealed fastener roof and wall panels under the prescriptive design provisions of the IBC and per the manufacturer's recommended guidelines is the foundation for providing a structurally sound, and aesthetically attractive, exterior that will last for decades to come.

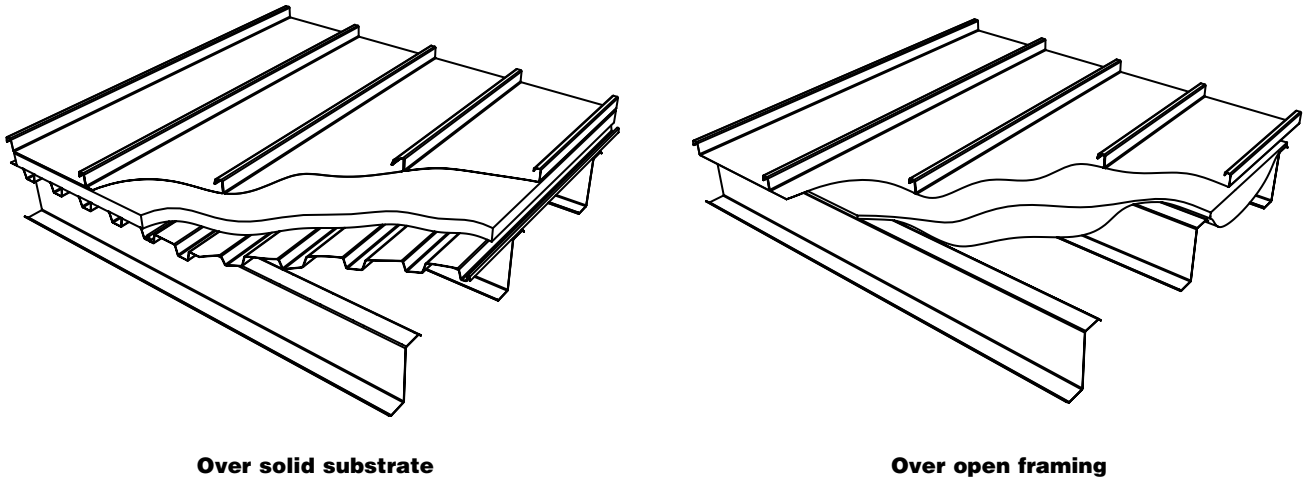

Figure 3: **Common concealed fastener panel installations**

Structural Design Requirements

IBC RECOGNITION OF ROOF AND WALL PANELS

The design basis for steel roof and wall panels is governed by the requirements of the International Building Code (IBC). Chapter 15 of the IBC addresses roof assemblies and roof top structures. Exterior walls are covered in Chapter 14. These chapters include the minimum provisions for the prescriptive design of roof and wall panels. The prescriptive design includes the basis for material requirements, reference to design loads, and the reference to determining the resistance of these steel panels to the design loads.

The roof panel material requirements are defined by IBC Section 1507.4.3 that primarily ensures adequate corrosion resistance. For wall panels, IBC Section 1405.2 applies. Most steel roof and wall panels are manufactured from either AZ-50 aluminum-zinc alloy coated steel per ASTM A792 or G-90 galvanized steel per ASTM A653 which both satisfy the IBC material standards.

The performance requirements for roof panels are defined in IBC Section 1504. The most common loads applicable to steel roof panels are dead, live, snow, and wind loads. IBC Section 1504.1 states that the wind resistance of roof systems shall meet the loading requirements defined in IBC Chapter 16 (*Structural Design*).

Section 1504.3.2 states that for wind resistance, metal roof panel systems shall be tested in accordance with UL580 or ASTM E1592. An exception to this requirement is that for roofs constructed of cold-formed steel that resist structural loads can be designed and tested per IBC Section 2210.1. Section 2210.1 specifies the use of AISI S100, *North American Specification for the Design of Cold-Formed Steel Structural Members*. AISI Section A3 specifies that the loads are to be in accordance with ASCE 7 where not otherwise specified within the applicable building code. It should also be noted that Section D6.2 of AISI clarifies and expands upon IBC's requirements of ASTM E1592 and includes provisions for the determination of safety and resistance factors.

Cold-formed steel wall panels are also to be designed in accordance with the requirements of IBC Chapter 2210 (*Cold-Formed Steel*) as defined in IBC Section 1404.5. Although no provisions are defined for testing the steel wall panels for outward wind loads, ASTM E1592 test specification applies to both roof and walls and is acceptable for use as a test method for these products.

The resistance of steel roof and wall panels to meet design loads can be established through rational design, testing, or a combination of both. Most concealed fastener steel roof and wall panels cannot be rationally designed for wind loads away from the structure because the performance is limited to the capacity of the panel seam and clip interface. This mode of failure is generally too complex to develop an analytical model without testing the panel assembly. Panels can generally be rationally designed to resist inward loads based on principles of engineering mechanics because the panels bear on the supporting substrate and clips, eliminating the complex failure of the panel seam and clip interface. This follows the provisions of cold-formed steel design in AISI S100 in accordance with IBC Section 2210, as specified in Section 1504.3.2 for roof assemblies, and Section 1404.5 for exterior walls.

This design guide contains methods for combining panel testing and rational engineering to determine the overall outward loading capacity of the roof or wall panel system. Associated panel properties and performance data are generally provided by the panel manufacturer and also may be contained within a published product approval report.

PRODUCT APPROVAL REPORTS

Product approval reports issued by third party evaluation services are a great aid to engineers and building officials. The reports for steel roof and wall panels contain product performance claims based on code provisions which may include the grade of steel, section properties, summarized test results, and load tables that help expedite the design process. This independent review of product performance claims helps to expedite the design process by eliminating the difficulty and the time it takes for designers and building officials to review the manufacturer's test data, and then to develop panel assembly capacities that may be outside their area of expertise. With product approval reports, the product claims are verified by a third party evaluation service to ensure conformance with the prescriptive provisions and performance testing requirements defined within the IBC. The approval reports may also be based on methods that are not prescribed in the IBC, which falls under 'alternate materials, designs and methods' in IBC Section 104.11.

Confidence in approval reports is based on the competency of the third party evaluation service. Proper accreditation provides a significant part of this confidence. The accreditation provides assurance that they are performing the product review in accordance with the applicable standards of the IBC. Three major evaluation services - International Association of Plumbing and Mechanical Officials' Uniform Evaluation Services (IAPMO Uniform ES), International Code Council Evaluation Services (ICC-ES), and Architectural Testing Inc., are all accredited to the stringent standards of the American National Standards Institute (ANSI) per the ISO/IEC Guide 65, *General Requirements for Bodies Operating Product Certification Systems*. These and other evaluation services that have the ISO/IEC Guide 65 accreditation are widely accepted.

SECTION PROPERTIES

The published section properties are used for determining the allowable inward out-of-plane loads. The section properties of each panel are directly related to the panel shape, gage, and grade of steel. They are calculated in accordance with the American Iron and Steel Institute's *North American Specification for the Design of Cold-Formed Steel Structural Members,* AISI S100-2007, Chapter B. Section properties are used to develop the bending and deflection capacity of steel panels for out-of plane loads which are typically defined by gravity or wind. The section properties are defined as either gross or effective and include the area of section, moment of inertia, and section modulus.

Effective Section Properties

For design purposes the effective properties are typically used to determine the panel's resistance to the applied loads. The effective section properties for steel panels are similar to other cold-formed steel members such as Cees and Zees; they are based on post buckling strength. Post buckling strength is based on the concept that the compression flanges and portions of the webs will exhibit some localized buckling prior to the full capacity of the panel being reached. To account for the buckling, the flat compression elements of the panel are reduced for the purpose of determining the section properties, excluding the portion of the panel that can no longer carry compression loads due to the buckling of the element.

The effective properties are determined at the full yield stress of the steel. As the grade of steel increases, the effective section properties decrease. The moment capacity of the panel increases with the increased grade of steel because the increasing yield strength outpaces the loss of effective compression width of the combined flat elements. The following table demonstrates this for AEP Span's 16″ Span-lok *hp*:

16" Span-lok *hp*							
Yield (ksi)	Gage	I_g (in^4)	Ie^+ (in^4)	Ie^- (in^4)	Se^+ (in^3)	Se^- (in^3)	Mn^+ (k-in)
33	24	.1965	.1898	.0825	.1194	.0731	3.145
40	24	.1965	.1868	.0795	.1175	.0699	3.751
50	24	.1965	.1815	.0765	.1132	.0665	4.519
80	24	.1965	.1763	.0750	.1088	.06340	5.209

Note: Span-lok *hp* is only offered in Grade 50. The other grades indicated above are for informative purposes only.

Gross Section Properties

The gross section properties of the panel are based on the entire cross sectional area. To determine the gross section properties, it is assumed that there are no "ineffective" elements across the section. The gross section properties are used in conjunction with the effective section properties to determine panel deflection under uniform out-of-plane loads.

Moment of Inertia

The service load moment of inertia is used to determine the deflection of the steel panel for uniformly distributed out-of-plane loads. The calculated moments of inertia are determined at a working stress level of 0.6FY. Following accepted practice the hybrid moment of inertia is the sum of two times the effective moment of inertia and the gross moment of inertia, divided by three:

$$I_d = \frac{2I_e + I_g}{3}$$

This equation takes into account that throughout the length of the span, portions of the panel will have low bending stress below the onset of localized compression buckling in which the gross section properties would be valid. The other portions of the span will have bending stresses high enough to push beyond the onset of localized compression buckling in which the effective section properties would be appropriate.

Section Property Tables

Below is an example of a typical published section property table that contains gross and effective section properties.

Panel Properties

Gauge	Weight	Base Metal Thickness	Yield Strength	Tensile Strength	Gross Section Properties: Area	Moment of Inertia	Distance to N.A. from Bottom	Positive Section Modulus	Negative Section Modulus
	w	t	Fy	Fu	A_g	I_g	y_b	S_g+	S_g-
	psf	in	ksi	ksi	in^2/ft	in^4/ft	in	in^3/ft	in^3/ft
24	1.36	0.0232	50	65	0.3976	0.1965	0.43	0.1250	0.4634
22	1.71	0.0294	50	65	0.5021	0.2460	0.42	0.1562	0.5806

Gauge	Effective Section Properties: Area	Positive: Moment of Inertia	Positive: Distance to N.A. from Bottom	Positive: Section Modulus	Negative: Moment of Inertia	Negative: Distance to N.A. from Bottom	Negative: Section Modulus	Uniform Load Only: $I_d = (2I_e+I_g)/3$	
	A_e/ft	I_e+	y_b	S_e+	I_e-	y_b	S_e-	I+	I-
	in^2	in^4/ft	in	in^3/ft	in^4/ft	in	in^3/ft	in^4/ft	in^4/ft
24	0.1096	0.1815	0.39	0.1132	0.0765	1.15	0.0665	0.1865	0.1165
22	0.1560	0.2363	0.41	0.1485	0.1043	1.12	0.0935	0.2395	0.1515

Weight of Panel Section per sq/ft

Panel Gage

Base Metal Thickness (without coating)

Effective Net Area of Section

Gross Section Properties are Identified by the Subscript, g

Effective Section Properties are Identified by the Subscript, e

Hybrid Moment of inertia fo Uniform Load Condition Only

Positive and Negative Effective Moment of Inertia for Non-uniform Load Conditions

Panel Design Loads

DESIGN LOADS

Design loads applied to steel roof and wall panels should be in accordance with ASCE 7. Inward and outward wind loads, and the internal building pressure due to wind loads, are resisted by the roof and wall panels. Roof panels are also subject to gravity loads including dead, live, and snow. The following are the load combinations from ASCE 7-10 that apply to roof and wall panels that include wind.

ASD

D + 0.6W

D + 0.75L + 0.75(0.6W) + 0.75(L_f or S or R)

0.6D + 0.6W

LRFD

1.2D + 1.6(L_f or S or R) + 0.5W

1.2D + W + L + 0.5(L_f or S or R)

0.9D + W

For load combinations that include wind, the wind loads can be multiplied by 0.67 for roof panels satisfying specific requirements in Appendix A, Section D6.2.1a of AISI S100-07. Conditions (b) and (c) are the responsibility of the engineer of record. Conditions (a) and (d-g) can be confirmed by the metal roof panel manufacturer. These can be confirmed via the manufacturer's approval report, or by verifying with the metal roof panel representative directly. Refer to the AISI excerpt below:

D6.2.1a Strength [Resistance] of Standing Seam Roof Panel Systems

In addition to the provisions provided in Section D6.2.1, for load combinations that include wind uplift, the nominal wind load shall be permitted to be multiplied by 0.67 provided the tested system and wind load evaluation satisfies the following conditions:

(a) The roof system is tested in accordance with AISI S906.

(b) The wind load is calculated using ASCE/SEI 7 for components and cladding, Method 1 (Simplified Procedure) or Method 2 (Analytical Procedure).

(c) The area of the roof being evaluated is in Zone 2 (edge zone) or Zone 3 (comer zone), as defined in ASCE/SEI 7, i.e. the 0.67 factor does not apply to the field of the roof (Zone 1).

(d) The base metal thickness of the standing seam roof panel is greater than or equal to 0.023 in. (0.59 mm) and less than or equal to 0.030 in. (0.77 mm).

(e) For trapezoidal profile standing seam roof panels, the distance between sidelaps is no greater than 24 in. (610 mm).

(f) For vertical rib profile standing seam roof panels, the distance between sidelaps is no greater than 18 in. (460 mm).

(g) The observed failure mode of the tested system is one of the following:

(i) The standing seam roof clip mechanically fails by separating from the panel sidelap.

(ii) The standing seam roof clip mechanically fails by the sliding tab separating from the stationary base.

APPLICATION OF DESIGN LOADS

The application of design loads to the steel roof or wall panels is dependent upon the substrate that supports the panels. The panels may be installed on solid substrates such as plywood, OSB, steel deck, or concrete. Panels may also be installed over open framing such as joists, purlins, beams, and skip sheeting. These loads should be applied using the load combinations defined in ASCE 7.

Panels installed over solid substrates do not carry all of the design loads. It is assumed that the solid substrate carries all inward loads including the external wind loads acting inwards, and the dead, live, and snow gravity loads. Panel clips may raise the panel up to ½" above the solid substrate but the flat pan of the panel will deflect under the maximum design loads, transferring these loads directly to the substrate. Any influence of the panel's strong axis bending capacity is ignored with this assumption. External wind loads acting outwards (wind uplift) is resisted by the panel and the loads transferred to the substrate through the panel fasteners. The internal building pressure (acting outward) is resisted by the solid substrate. This assumption is based on the premise that in the short duration of the design wind gust, the internal pressure will not have time to build and infiltrate through the solid substrate and pressurize the underside of the steel roof or wall panels. See Figure 4.

When installed over open framing the panel will carry all of the design loads and transfer these loads to the support framing members. The panel must support the gravity loads which include dead, live, and snow loads. The panels must also carry the net inward and outward wind loads. See Figure 4.

DEFLECTION LIMITS

Roof and wall panels deflect under inward and outward loads. These deflections are generally restricted to the L/60 limit as defined in the International Building Code (IBC), Chapter 16, Table 1604.3. See Figure 5. The IBC prescribes deflection limits to address the fact the roof assemblies are comprised of several materials that have varied stiffness and to limit the possibility of perceivable vibrations. For structural roofing and siding panels the table indicates a recommended deflection limit of L/60 for combined dead and live loads. Since steel roof and wall panels generally do not directly support brittle or vibration/ deflection sensitive interior finish materials, an L/60 deflection limit is appropriate in most cases.

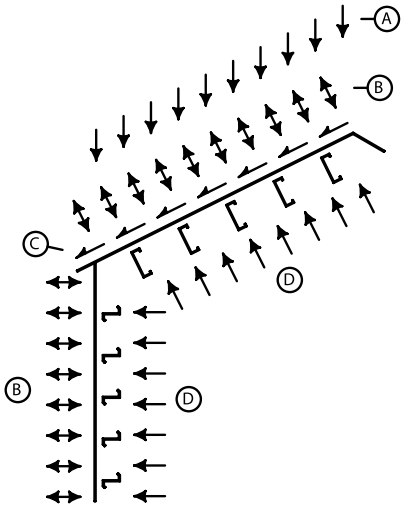

Summary of applied loads

- (A) GRAVITY LOADS (LIVE, DEAD, SNOW)
- (B) EXTERNAL WIND LOADS ACTING INWARDS AND OUTWARDS
- (C) DRAG LOADS INDUCED BY GRAVITY LOADS
- (D) INTERNAL PRESSURES ACTING OUTWARDS
- (E) EXTERNAL WIND LOADS ACTING OUTWARDS (UPLIFT)
- (F) EXTERNAL WIND LOADS ACTING INWARDS

Panels over open framing

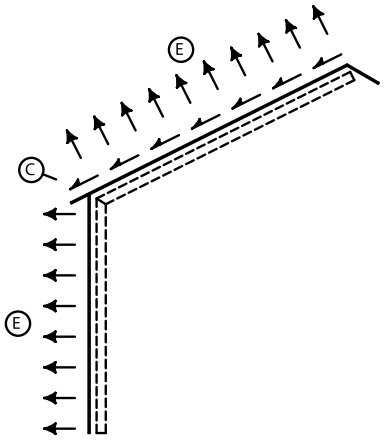

Panels over solid substrate (Panel loads)

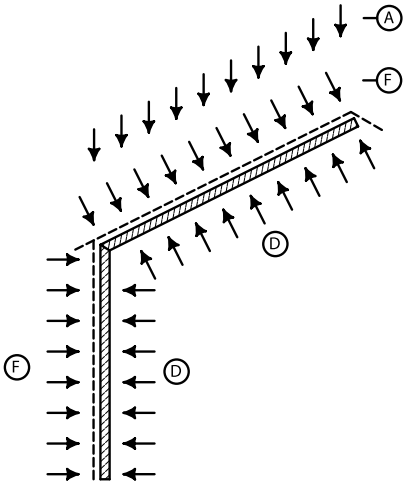

Panels over solid substrate (Substrate loads)

Figure 4: **Application of design loads**

Contruction	Load Combinations		
	Live	Dead + Live	Wind or Snow 4.5
Roof: Plaster ceiling	L/360	L/240	L/360
Roof: Non-plaster ceiling	L/240	L/180	L/240
Roof: No ceiling	L/180	L/120	L/180
Structural roofing and siding metal panels	. . .	L/60	. . .
Secondary roof members supporting metal roofing panels	L/150	. . .	. . .
Secondary roof support members supporting metal roof panels with no roof covering	. . .	. . .	L/90
Floor	L/360	L/240	. . .

Figure 5: **IBC deflection limits**

PANEL RESISTANCE TO INWARD (POSITIVE) LOADS

The panel's inward loading capacity is determined by equations of mechanics using the calculated section properties. The methods for developing section properties and member capacities (bending, shear, combined bending and shear, and web crippling, and combined bending and web crippling) for all cold-formed steel structural members, including steel roof and wall panels, are prescribed in AISI S100.

To aid in the selection of steel roof and wall panels, AEP Span publishes inward uniform load tables which are based upon the overall inward panel capacity. The tables also include common service load deflection limits typically dictated by code requirements. Where no deflection limit value is listed in the table, the panel strength governs for the particular span and deflection limit combination. An example is shown in Figure 6 on next page.

Span-Lok™ hp, Curved Span-Lok™ & SpanSeam

Attachment Spacing

Panel Name

Panel Gage

Span: Single, Double, or Triple

Indicates Panel Stess Limit Reached Before Deflection Limit

Panel Capacities Limited by Panel Stress

Panel Capacities Limited by Deflection Limits

16" Width Span-Lok *hp* & SpanSeam

Gage	Span	Cond.	Allowable Inward Loads (lbs/ft²) per Span (ft.-in.) 2-0	2-6	3-0	3-6	4-0	4-6	5-0
24	SS	f	486	327	233	174	135	107	88
		L/180	-	-	-	-	-	-	-
		L/60	-	-	-	-	-	-	-
	DS	f	303	200	142	104	80	63	52
		L/180	-	-	-	-	-	-	-
		L/60	-	-	-	-	-	-	-
	TS	f	368	244	174	129	99	79	65
		L/180	-	-	-	-	-	-	-
		L/60	-	-	-	-	-	-	-
	SS	f	667	442	313	233	179	142	116
		L/180	-	-	-	-	-	-	-

12" Width Span-Lok *hp*

Gage	Span	Cond.	Allowable Inward Loads (lbs/ft²) per Span (ft.-in.) 2-0	2-6	3-0	3-6	4-0	4-6	5-0
24	SS	f	629	421	301	224	174	139	112
		L/180	-	-	-	-	-	-	-
		L/60	-	-	-	-	-	-	-
	DS	f	405	266	188	140	107	85	70
		L/180	-	-	-	-	-	-	-
		L/60	-	-	-	-	-	-	-
	TS	f	490	326	232	172	133	106	86
		L/180	-	-	-	-	-	-	-
		L/60	-	-	-	-	-	-	-
	SS	f	873	578	409	304	235	186	151
		L/180	-	-	-	-	-	-	-

Figure 6: **Inward uniform load capacity table**

PANEL RESISTANCE TO OUTWARD (NEGATIVE) LOADS

For concealed fastener roof and wall panels that require testing to determine the resistance to the design loads, they should be tested in accordance with ASTM E1592, *Test Method for Structural Performance of Sheet Metal Roof and Siding Systems by Uniform Static Air Pressure Difference*. IBC Section 1504.3.2 allows for the use of ASTM E1592 or UL 580. It should be noted that the results of UL 580 testing provides a UL rating which is only used to evaluate the comparative resistance of one roof system to another and does not report the ultimate capacity of the roof panel system. For example, a UL90 rating doesn't indicate an ultimate or allowable capacity of 90psf. On the other hand, ASTM E1592 reports the ultimate performance of the roof panel system that can then be used to develop the factored or allowable capacity using the resistance and safety factors prescribed in AISI S100 Section D6.2 in accordance with IBC Section 2210.

The ASTM E1592 test utilizes a static air pressure differential to create a uniform load across the panels to simulate uplift forces on the roof system. The test cycles the panels through increasing loads until the panel assembly can no longer support loads or no longer functions as a weather-tight membrane. The test's uniform pressure loads the entire load path from the panel surface to the seam, the seam/clip interaction, clip, clip/fastener interaction, fastener, and fastener/substrate interaction as shown in Figure 7. The uplift capacity of the entire panel assembly is thoroughly evaluated with this test method.

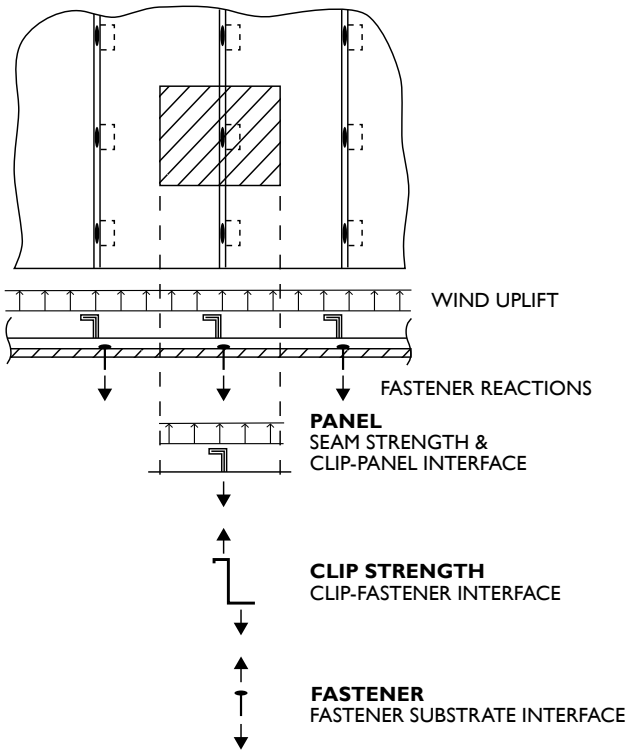

Figure 7: **Panel to substrate load path**

To generate test results with the widest applicability, some test variables are eliminated as possible modes of failure. Fastener strengths and pull-out resistance from the substrate can be obtained through fastener testing or through prescriptive fastener design methods. The clip capacity, clip-seam interface, panel and seam strengths cannot be rationally designed using engineering mechanics for most concealed fastener panels. To ensure that the test's mode of failure is related to the panel/clip assembly and not the fastener, the fasteners and substrates are intentionally overd esigned to ensure they do not fail in the test.

The load path for the outward uniform wind load is distributed to the panel attachments based on the panel's tributary area to the clip and/or fastener. Figure 8 depicts this tributary area.

For clip attached panels the load applied to the clip is then transferred to the substrate through the clip fasteners. It is important to consider the increase in fastener loading due to the eccentricity of the fasteners relative to the panel seam. See Figure 9 which shows the typical eccentric loading of the on panel clip fasteners.

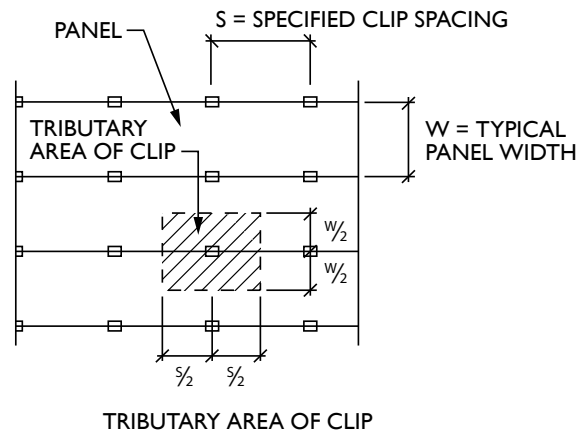

Figure 8: **Tributary area**

Clip with one fastener, or multiple fasteners in a line parallel to panel seam.

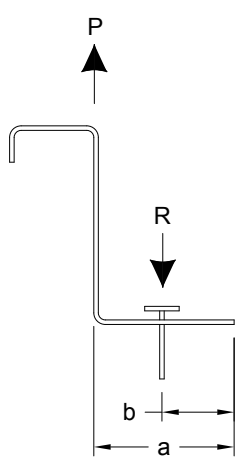

$$Sum\,M = 0$$

$$P(a) - R(b) = 0$$

$$R = \frac{P(a)}{(b)(\#\,fasteners)}$$

Clip with a line of 2 fasteners perpendicular to panel seam.

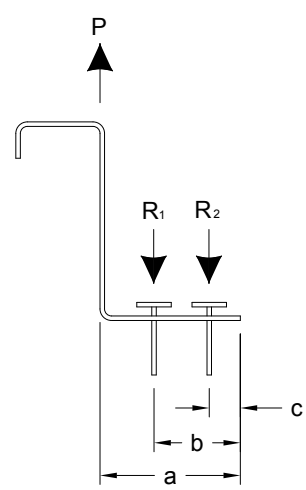

$$Sum\,M = 0$$

$$P(a) - R_1(b) - R_2(c) = 0$$

$$Using\,,\ \frac{R_1}{b} = \frac{R_2}{c}$$

$$R_1 = \frac{\mathrm{P}(a)}{(b + c^2/b)} \qquad R_2 = \frac{\mathrm{P}(a)(\mathrm{c})}{(b^2 + c^2)}$$

Figure 9: **Eccentric load of panel clip fasteners**

To assist in specifying clip and fastener attachment patterns to resist the outward wind design loads, AEP Span publishes attachment schedules for common fastener and substrate combinations. See Figure 10. These tables allow the user to quickly select a clip and/or fastener spacing based on the allowable or factored resistance of the panel and the attachment to the substrate based on the outward wind load requirements. The attachment schedules for AEP Span's panels are based on a combination of testing, principles of engineering mechanics, and connection strength. The methods used to develop these tables can be extended to other substrates or fasteners for the panels. Design Examples #2 and #3 at the end of this document provide insight on how this process works.

Attachment Spacing

Panel Name/Configuration

Maximum Allowable & Factored Panel/Clip Capacities

16" Span-lok hp & SpanSeam, 22ga, with Std. Clip

Substrate		Fastener # per clip	Fastener Size	Clip Spacing (ft-in) 1' - 0"		1' - 6"		2' - 0"		2' - 6"		3' - 0"		3' - 6"		4' - 0"		4' - 6"		5' - 0"	
				Panel / Clip Capacity (psf), Allowable and Factored																	
				241	381	220	348	199	315	178	282	158	249	137	216	116	183	95	150	74	116
				Allowable Uplift Capacity, P_a, Factored Capacity, P_f (psf)																	
				P_a	P_f	P_a	P_f	P_a	P_f	P_a	P_f	P_a	P_f	P_a	P_f	P_a	P_f	P_a	P_f	P_a	P_f
Cold Formed Steel (Gr 55 min.)	12ga (.1050)	2	#10	241	381	198	297	148	223	119	178	99	149	85	127	74	111	66	99	59	89
		2	#12	241	381	220	338	169	253	135	203	112	169	96	145	84	127	75	113	67	101
		2	1/4"	241	381	220	348	195	293	156	234	130	195	112	167	98	146	87	130	74	116
	14ga (.0700)	2	#10	198	297	132	198	99	149	79	119	66	99	57	85	49	74	44	66	40	59
		2	#12	225	338	150	225	112	169	90	135	75	113	64	96	56	84	50	75	45	68
		2	1/4"	241	381	174	261	130	195	104	156	87	130	74	112	65	98	58	87	52	78
	16ga (.0590)	2	#10	167	250	111	167	83	125	67	100	56	83	48	71	42	62	37	56	33	50
		2	#12	190	284	126	190	95	142	76	114	63	95	54	81	47	71	42	63	38	57
		2	1/4"	219	329	146	220	110	165	88	132	73	110	63	94	55	82	49	73	44	66
	18ga (.0470)	2	#10	133	200	89	133	66	100	53	80	44	67	38	57	33	50	30	44	27	40
		2	#12	151	227	101	151	76	113	60	91	50	76	43	65	38	57	34	50	30	45
		2	1/4"	175	263	117	175	87	131	70	105	58	88	50	75	44	66	39	58	35	53
Cold Formed Steel	16ga (.0598)	2	#10	109	163	72	109	54	81	43	65	36	54	31	47	27	41	24	36	22	33
		2	#12	124	185	82	124	62	93	49	74	41	62	35	53	31	46	27	41	25	37
		2	1/4"	143	215	95	143	71	107	57	86	48	72	41	61	36	54	32	48	29	43
	18ga (.0478)	2	#10	87	131	58	87	43	65	35	52	29	44	25	37	22	33	19	29	17	26
		2	#12	99	148	66	99	49	74	39	59	33	49	28	42	25	37	22	33	20	30
		2	1/4"	114	172	76	115	57	86	46	69	38	57	33	49	29	43	25	38	23	34

Substrate Material

Substrate Thickness

Fasteners Used per Clip

Appropriate Attachment fasteners

Panel Assembly Capacities (Allowable and Factored) Based on Specific Fastener & Substrate Combination

Figure 10: **Fastener attachment schedule**

ROOF ATTACHMENT (POINT) LOADS ONTO METAL ROOFING

Prior discussion of design loads within this guide focused on uniform loads. Roof attachments, including loads from solar racking, induce concentrated point loads that must be appropriately accounted for. The guidance that follows evaluates applications where the roof attachments are made directly to the panel seam, which is the predominate method for the attachment of these point loads.

Figure 7 showed us uniform loads and their associated load path back to the substrate. Figure 11 shows typical load paths for point loads applied in-line with the panel attachment clips and for loading conditions where the load is applied between the clips.

LOAD PATH ANALYSIS

Roof attachment (seam clamps)

Roof attachments are commonly fastened to metal roofing via roof seam clamps. S-5!® and AceClamp® are two popular solutions. The S-5! website provides some design guidance as well as a rather extensive list of clamp options and clamp capacities for both longitudinal (drag) loads and perpendicular (wind uplift) loads.

It must be noted that the capacities listed with S-5! only evaluate the clamp-to-panel connection. The test results do not take into consideration the entire load path which also includes panel bending strength, clip-panel interface, clip strength, and fastener-to-substrate capacities.

For roof clamps that do not have capacities listed, tests will need to be conducted to develop capacities unless the connection can otherwise be rationally evaluated.

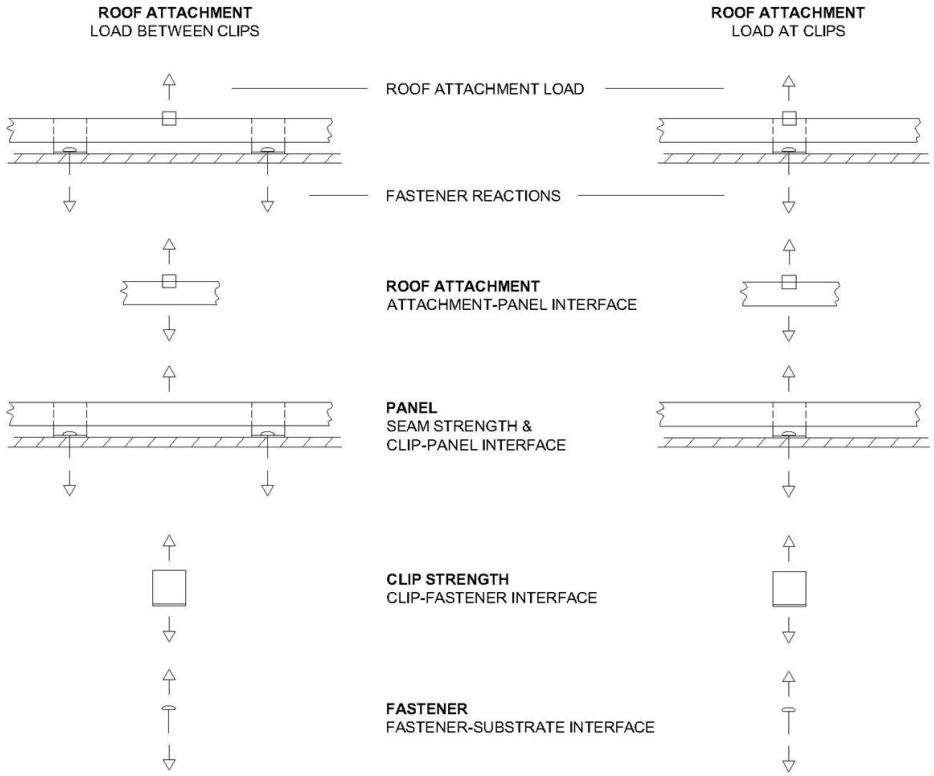

Figure 11: **Roof attachment load path**

Loads through Panel Seam

For applications where point loads are applied between roof panel clips, the bending capacity of the roof panel should be evaluated. Standard engineering mechanics and panel section properties provided by the metal roofing manufacturer will assist the user in determining if the roof attachment loads are acceptable for this segment of the load path. This design guide assumes that the applied point load is within a roof panel array and the subsequent beam analysis uses fixed ends; see Figure 12. This approach relies on the position that the surrounding panel array does not allow the beam ends to rotate. If a more thorough load analysis is required for a particular project, then the design professional may extend beyond this basic analysis as needed.

In applications where the roof attachment clamps are installed directly over the roof panel clips (or panel-to-substrate attachment), the bending capacity of the panel does not need to be evaluated.

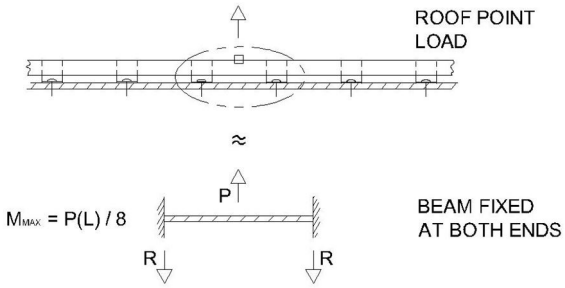

Figure 12: **Point load analysis**

Clip/Panel Capacities

The clip-to-panel capacities can be derived from the panel assembly uplift tests, or from subsequent panel attachment tables. This method is generally conservative as it uses system limits not just the clip-to-panel capacities. Beyond this, clip-to-panel capacities can also be developed from dedicated clip pull testing.

Example: 16in wide panel tested at a 5ft attachment spacing has an allowable system capacity of 50psf. In looking at the tributary area of each clip, 1.33ft x 5ft = 6.65ft, the clip-to-panel allowable capacity is at least 6.65ft x 50psf = 332.5lbs.

When evaluating roof attachments, it is also important to understand what panel clips are being utilized:

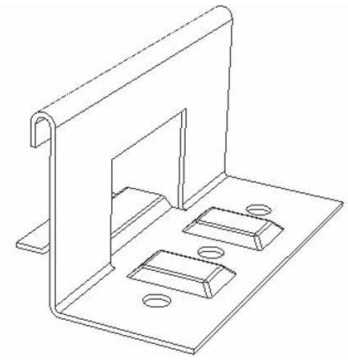

One piece clips: Some roof panel assemblies utilize a one-piece clip design in which thermal movement is managed by the clip sliding within the panel seam. These designs require that the roof attachments not be located over the panel clip, or within a couple inches of the panel clip as these roof attachments could interfere with the ability of the panel assembly to address thermal movement.

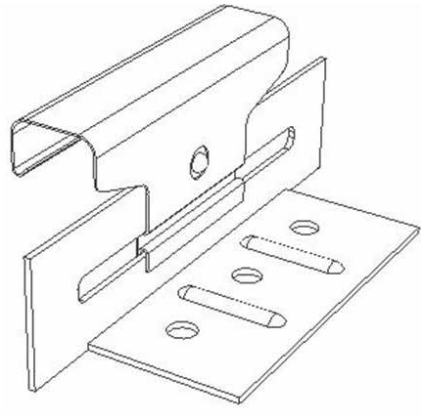

Two piece clips: Panel assemblies that utilize a two-piece clip design generally employ a clip that manages thermal movement between the upper and lower clip portions. For these applications it is best to locate roof attachments directly over the clip to avoid having to analyze the bending capacity of the metal roof panel. Thermal movement is not hindered by the location of the roof attachments. The load path goes directly from the roof attachment clamps, through the panel clip, and into the panel substrate.

Clip-To-Substrate Capacities

The clip-to-substrate capacities are often the primary constraint in the roof attachment load path. Fastener capacities into various substrates can be evaluated based on industry standards, per testing, or per approved evaluation or acceptance report for the fastener. Refer to Section 5.2 of the IAPMO-UES Evaluation Criteria #EC 011 for further guidance on the development of these capacities. Increase in fastener loading due to the eccentricity of the fasteners relative to the panel seam shall also be taken into account. Refer to page 9 for an explanation of this.

PHOTOVOLTAIC (PV) ATTACHMENT CONSIDERATIONS

Code Direction (2012 IBC)

With the introduction of the 2012 IBC, specific language has been added around the evaluation of solar structures although the building code provides little direction on the specific evaluation of these structures.

Calculation of PV Design Loads

The following are the four common types of PV installation configurations and the currently available (at the release of this design guide) consensus standards for evaluating them for wind loads:

Flush mounted PV on flat roofs: Use ASCE-07. PV is parallel to roof surface and within 10in.

Flush mounted PV on sloped roofs: Use ASCE-07. PV is parallel to roof surface and within 10in.

Sloped PV on flat roofs: SEAOC-PV2 design guide. Limited to roof slopes ≤ 7°, and mean roof heights ≤ 60ft.

Sloped PV on sloped roofs: There are no industry approved analytical methods for evaluating. Wind tunnel testing is recommended for the proper review of these applications.

Other PV wind design resources that exist, but have not been verified for appropriateness or accuracy (use with caution):

UniRac design tool: http://design.unirac.com/tool/

Center For Environmental Innovation In Roofing about PV Racking Criteria for Low-Slope Metal Roof Systems: http://roofingcenter.org/main/Initiatives/pv

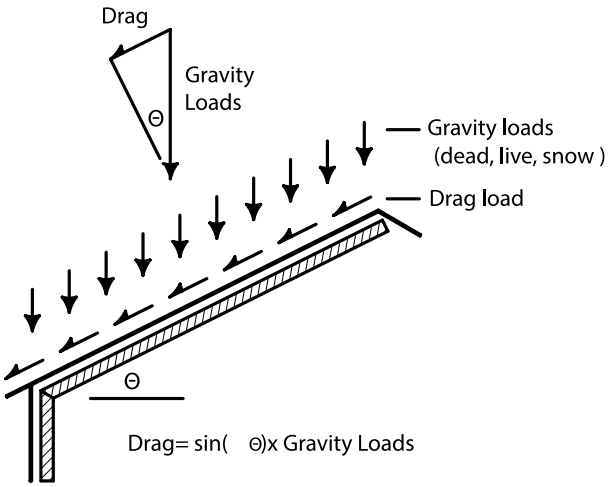

Figure 13: **Drag loads**

DRAG LOADS

Drag loads are forces on a sloped roof panel caused by gravity loading (dead, live and snow). There exists a component of the gravity force that acts down the roof slope. This loading is depicted in Figure 13. This drag load causes the panels to want to slide off the roof. Panels must be properly fixed to the substrate to overcome these drag loads. This is typically accomplished by through-fastening the panel to the substrate under the ridge cap flashing. The number of fasteners required per panel is rationally calculated using principles of engineering mechanics and fastener properties. For evaluation purposes, the interaction between the panel and the underlayment is assumed to be frictionless (worst case). In heavier snow climates it may be necessary to have more than 10 fasteners per panel to keep the panels in place. Also note that it is very important to only have one point of fixity on a concealed fastener roof or wall panel. This allows the panels to naturally expand and contract which assists in preventing any thermal movement issues.

HOW TO SPECIFY PRODUCT ON DRAWINGS

Correctly specifying steel roof and wall panels on the design drawings is important to ensure that the desired panel is specified and attached to the structure in a manner that will resist the required design loads.

Traditionally panels have been selected by the architect and then the manufacturer or specialty engineer provides engineering services to determine the panel attachment to the structure as a deferred structural submittal. Some jurisdictions such as the California Division of the State Architect are now requiring the steel roof and wall panels to be fully engineered and submitted for design review prior to construction permits being issued.

Deferred engineering submittals can create problems if the selected steel roof or wall panel assembly is not capable of meeting the project's load requirements. This can lead to addendums being issued to adjust the specified panel which may lead to costly changes during the project's construction phase. If the correct panel and attachment schedule is specified and clearly shown on the contract drawings, the risk of these costly changes can be reduced by ensuring the desired panel is capable of meeting the structural requirements.

Attachment Zones

The primary requirement that defines the attachment of steel roof and wall panels is outward wind loading. It can be difficult to describe the clip and fastener spacing for a particular building area within the specifications, therefore conveying the information on the architectural or structural design drawings is a useful and effective option.

To provide the least installed cost to the building owner, the attachment spacing should vary based on the design loads. A zone map of the roof and/or building elevations showing the uplift pressure zones is a good basis for providing the attachment spacing optimized for each zone. Figure 14 is an example of a gable roof plan with clearly identified zones. On simple projects the zones may be numbered 1, 2 and 3 following the zone designations outlined in ASCE-7 for wind loads. For complex roof configurations with more than three zones, the designer will need to provide an alternate numbering or lettering system to describe all the zones on the building.

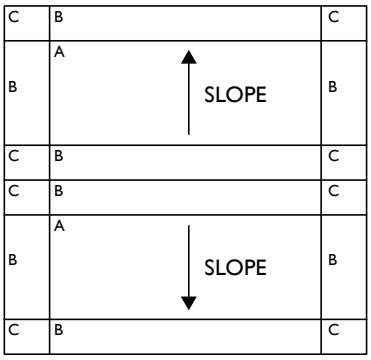

ROOF ZONE PLAN

Figure 14: **Wind zone map**

Attachment Schedule

The attachment schedules for steel roof and wall panels should use an optimized clip and fastener spacing for each building wind zone. The attachment spacing should be defined by the outward panel loading but not exceed the support spacing required for the inward panel loads. The schedule should include the following information:

- Clip type and spacing.
- Fastener type and spacing.

See Figure 15 for an example of panel attachment schedule. Optional information would be to include drag load fastener requirements. The drag load attachment could also be conveyed in the details on the plans if the project does not require different zones for drag load fasteners. Drag load requirements would include:

- Drag fastener type and quantity.

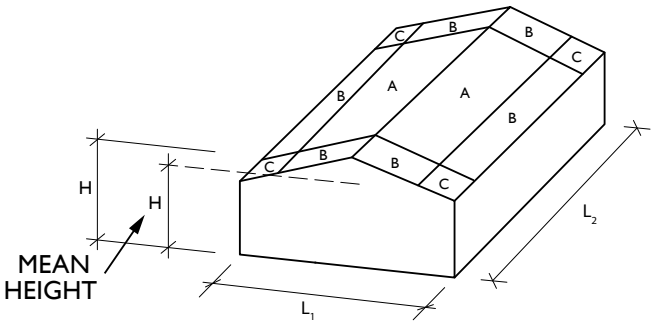

Steel Roof Panel Schedule										
Zone	Panel				Clip		Clip Fasteners		Drag Fasteners	
	Manufacturer	Type	Width, in	Gage	Type	Spacing, in	Type	Quantity	Type	Quantity
A	AEP Span	Span-Lok *hp*	16	24	2-1/2" Std	60	#12	2	#14	3
B	AEP Span	Span-Lok *hp*	16	24	2-1/2" Std	36	#12	2	#14	3
C	AEP Span	Span-Lok *hp*	16	24	2-1/2" Std	12	#12	2	#14	3

Figure 15: **Panel Attachment schedule**

DESIGN EXAMPLES

The following are several design examples to show what steps are necessary to design in a steel roof or wall panel. Examples will be evaluated:

Installations over Solid Substrates

#1 - Over 19/32″ plywood (using published fastener attachment tables)
#2 - Over 19/32″ plywood (using calculations)
#3 - Over 20ga steel deck (using calculations)

Installations over Open Framing

#4 - Over 16ga steel purlins (using published fastener attachment tables)
#5 - Over 16ga steel purlins (using calculations)

Other Considerations

#6 - Drag loads over plywood
#7 - Drag loads over steel purlins
#8 - Thermal movement (clips and joggle cleats)
#9 - Roof attachment (point load)

Common Parameters:

Panel: AEP Span 16″ Span-lok *hp*, 24ga (0.0232)
Fastener: #12 (ø0.216 nominal diameter as defined in 2005 NDS Table 11.3.2A and in 2007 AISI S100 Commentary, Table C-E4-1)

Notes:

- Roof panels are evaluated in these examples. Wall panel evaluation is similar using applicable wall design loads.
- All examples use Allowable Stress Design (ASD)
- The example calculations are for one roof zone only.
- Only uniform loads are evaluated.
- Positive(+) loads indicate towards the surface, (-) indicates away from.
- Installations over open framing are evaluated as a triple span condition.

DESIGN EXAMPLE #1: Installation over 19/32” Plywood (tables)

The only design loads that are applied to the roof panel are the outward loads and drag loads (drag loads addressed in Design Examples #6 and #7)

Conditions:

The ASCE7-10 load combinations produce the following loads:
Outward loads = -40psf

Span at which fastener and substrate combination meets or exceeds 40psf uplift. Per published panel attachment table:

16" Span-lok hp & SpanSeam, 24ga, with Std. Clip																					
Substrate		Fastener		Attachment Spacing, (ft-in)																	
		# per clip	Size	1' - 0"		1' - 6"		2' - 0"		2' - 6"		3' - 0"		3' - 6"		4' - 0"		4' - 6"		5' - 0"	
				Panel / Clip Negative (Outward) Uniform Load Capacity, (lbs/ft^2)																	
				190	298	174	273	158	248	142	223	126	198	110	173	94	148	77	123	61	98
				Panel System Negative (Outward) Uniform Load Capacity, (lbs/ft^2)																	
				ASD W/**W**	LRFD ϕW	ASD W/**W**	LRFD ϕW	ASD W/**W**	LRFD ϕW	ASD W/**W**	LRFD ϕW	ASD W/**W**	LRFD ϕW	ASD W/**W**	LRFD ϕW	ASD W/**W**	LRFD ϕW	ASD W/**W**	LRFD ϕW	ASD W/**W**	LRFD ϕW
	12ga	2	#10	190	*298*	174	*273*	148	*223*	119	*178*	99	*149*	85	*127*	74	*111*	66	*99*	59	*89*
Plywood & OSB		2	#14	77	*104*	52	*70*	39	*52*	31	*42*	26	*35*	22	*30*	19	*26*	17	*23*	15	*21*
	19/32"	2	#10	78	*106*	52	*71*	39	*53*	31	*42*	26	*35*	22	*30*	20	*26*	17	*24*	16	*21*
		2	#12	89	*120*	59	*80*	44	*60*	36	*48*	30	*40*	25	*34*	22	*30*	20	*27*	18	*24*
		2	#14	98	*132*	65	*88*	49	*66*	39	*53*	33	*44*	28	*38*	24	*33*	22	*29*	20	*26*
	23/32"	2	#10	95	*128*	63	*85*	47	*64*	38	*51*	32	*43*	27	*36*	24	*32*	21	*28*	19	*26*

Clips will need to be installed at a 2′-0″ spacing to meeting 40psf design loads.

DESIGN EXAMPLE #2: Installation over 19/32" Plywood (using calculations)
Conditions:
The ASCE7-10 load combinations produce the following loads:
Outward loads = -40psf

Span at which panel/clip capacity exceeds the 40psf uplift requirement per published allowable outward load capacities (independent of fastener/substrate) via product sheets, manufacturer representative, or similar.

	Allowable Outward Loads (lbs/ft²) per Span (ft.-in.)								
Gage	1-0	1-6	2-0	2-6	3-0	3-6	4-0	4-6	5-0
24	189.9	177.0	163.2	148.5	132.8	116.2	98.7	80.3	61.0
22	249.1	219.2	191.7	166.7	144.1	124.1	106.6	91.5	78.9

Panels installed at 5′-0″ exceed 40psf design loads (panel capacity, not fastener/substrate capacity), taken from product sheet.

Next, span at which fastener and substrate combination exceeds 40psf uplift requirement.

Fastener pullout strength per NDS Equation 11.2-2: $2850 \times G^2 \times D$

G = 0.45 (Plywood and OSB) as specified in The Engineered Wood Association APA #TT-051C $2850 \times 0.45^2 \times 0.216 = 124.6 lbs/in$

ASD Adjustment factors per NDS Table 10.3.1:

$$C_{tot} = C_D \times C_M \times C_t \times C_{eg} \times C_{tn}$$

$$C_{tot} = 1.6 \times 1.0 \times 1.0 \times 1.0 \times 1.0 = 1.6$$

Fastener pullout capacity = $124.6 \frac{lbs}{in} \times 1.6 \times \frac{19}{32} in = 118.4 lbs$

Fastener capacity per square foot = $\frac{(\text{\# fasteners} \times \text{fastener tension capacity} \div \text{fastener load adjustment})}{\text{panel width} \times \text{clip spacing}}$

Determine fastener load adjustment using engineering mechanics (refer to design guide) and clip dimensions.

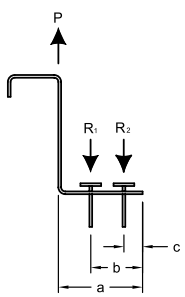

$$R_2 = \frac{P(a)(c)}{(b^2 + c^2)} = 0.64(P)$$

$$R_1 = \frac{P(a)}{(b + c^2/b)} = 1.36(P)$$

where a=1.56, b=0.94, c=0.44

Combined fastener adjustment = 1.36+0.64 =2.0

Fastener capacity per square foot = $\frac{(2 \times 118.4 lbs \div 2.0)}{(1.33 ft \times 1.0 ft)} = 89.0 lbs/ft^2$

Maximum clip spacing based on fastener/substrate capacity = $89.0 psf \div 40 psf = 2.22 ft = 2'-3"$

Overall capacity is the minimum of the panel/clip capacity, 5′-0″ and fastener/substrate capacity, 2′-3″

Max span is 2′-3″ to meet outward wind load requirements.

Note: This design example shows usage of the Span-Lok hp Standard Clip although applications over solid substrate often utilize the Low Profile Clip with its lower standoff (not shown).

DESIGN EXAMPLE #3: Installation over 20ga Steel Deck (using calculations)

Conditions:
The ASCE7-10 load combinations produce the following loads:
Outward loads = -40psf

Span at which panel/clip capacity exceeds the 40psf uplift requirement per published allowable outward load capacities: At 5′-0″ attachment spacing, panel/clip capacity exceeds 40psf design loads (taken from Design Example #2).

Next, span at which fastener and substrate combination exceeds 40psf uplift requirement.

Nominal fastener pullout strength based on 2007 AISI S100, Equation E4.4.1-1:

$$P_{not} = 0.85 \times t_c \times d \times F_{u2}$$

$$t_c = \text{Substrate thickness} = 0.0359in$$

$$d = \text{Nominal screw diameter } = 0.216in$$

$$F_{u2} = \text{Tensile strength, substrate } = 45,000lb/in^2, \text{taken from product sheet}$$

$$P_{not} = 0.85 \times (0.0359in)(0.216in)(45,000lb/in^2)$$
$$= 296lb$$

Fastener pullout capacity, ASD

$$P_a = \frac{P_{not}}{\Omega} \quad \text{where } \Omega = 3.0$$
$$= \frac{296lb}{3.0} = 98.6lb$$

Fastener capacity per square foot = $\dfrac{(2 \text{ fasteners} \times 98.6lbs \div 2.0 \text{ fastener load adjustment})}{(1.33ft \times 1.0ft)} = 74.1lbs/ft^2$

Maximum clip spacing based on fastener/substrate capacity = $74.1psf \div 40psf = 1.85ft = 1'\text{-}10''$

Overall capacity is the minimum of the panel/clip capacity, 5′-0″ and fastener/substrate capacity, 1′-10″

Max span is 1′-10″ to meet outward wind load requirements.

DESIGN EXAMPLE #4: Roof Installation over 16ga Purlins (tables)
The design loads that are applied to panels over open framing are gravity loads, external inward and outward acting loads, internal loads acting outwards, and drag loads (drag loads addressed in Design Example #6).

Conditions:
The ASCE7-10 load combinations produce the following loads:
Outward loads = -60psf
Inward loads = +40psf

Panel outward load capacities:
Span at which fastener and substrate combination meets or exceeds 60psf uplift. Per published panel attachment table:

16" Span-lok hp & SpanSeam, 24ga, with Std. Clip																							
Substrate		Fastener		Attachment Spacing, (ft-in)																			
		# per clip	Size	1' - 0"		1' - 6"		2' - 0"		2' - 6"		3' - 0"		3' - 6"		4' - 0"		4' - 6"		5' - 0"	
				Panel / Clip Negative (Outward) Uniform Load Capacity, (lbs/ft^2)																			
				190	298	174	273	158	248	142	223	126	198	110	173	94	148	77	123	61	98
				Panel System Negative (Outward) Uniform Load Capacity, (lbs/ft^2)																			
				ASD W/**W**	LRFD ϕW	ASD W/**W**	LRFD ϕW	ASD W/**W**	LRFD ϕW	ASD W/**W**	LRFD ϕW	ASD W/**W**	LRFD ϕW	ASD W/**W**	LRFD ϕW	ASD W/**W**	LRFD ϕW	ASD W/**W**	LRFD ϕW	ASD W/**W**	LRFD ϕW
Cold Formed Steel (Gr 55 min.)	12ga (.1050)	2	#10	190	*298*	174	*273*	148	*223*	119	*178*	99	*149*	85	*127*	74	*111*	66	*99*	59	*89*
		2	#12	190	*298*	174	*273*	158	*248*	135	*203*	112	*169*	96	*145*	84	*127*	75	*113*	61	*98*
		2	1/4"	190	*298*	174	*273*	158	*248*	142	*223*	126	*195*	110	*167*	94	*146*	77	*123*	61	*98*
	14ga (.0700)	2	#10	190	*297*	132	*198*	99	*149*	79	*119*	66	*99*	57	*85*	49	*74*	44	*66*	40	*59*
		2	#12	190	*298*	150	*225*	112	*169*	90	*135*	75	*113*	64	*96*	56	*84*	50	*75*	45	*68*
		2	1/4"	190	*298*	174	*261*	130	*195*	104	*156*	87	*130*	74	*112*	65	*98*	58	*87*	52	*78*
	16ga (.0590)	2	#10	167	*250*	111	*167*	83	*125*	67	*100*	56	*83*	48	*71*	42	*62*	37	*56*	33	*50*
		2	#12	190	*284*	126	*190*	95	*142*	76	*114*	63	*95*	54	*81*	47	*71*	42	*63*	38	*57*
		2	1/4"	190	*298*	146	*220*	110	*165*	88	*132*	73	*110*	63	*94*	55	*82*	49	*73*	44	*66*
	18ga (.0470)	2	#10	133	*200*	89	*133*	66	*100*	53	*80*	44	*67*	38	*57*	33	*50*	30	*44*	27	*40*
		2	#12	151	*227*	101	*151*	76	*113*	60	*91*	50	*76*	43	*65*	38	*57*	34	*50*	30	*45*
		2	1/4"	175	*263*	117	*175*	87	*131*	70	*105*	58	*88*	50	*75*	44	*66*	39	*58*	35	*53*

Clips will need to be installed at a 3′-0″ maximum spacing to meet 60psf outward design loads.

Panel inward load capacities:
Span at which fastener and substrate combination meets or exceeds 40psf inward loading. Per load table on published panel product sheet:

16" Width Span-Lok *hp* & SpanSeam									
			Allowable Inward Loads (lbs/ft^2) per Span (ft.-in.)						
Gage	Span	Cond.	2-0	2-6	3-0	3-6	4-0	4-6	5-0
24	SS	f	486	327	233	174	135	107	88
		L/180	-	-	-	-	-	-	-
		L/60	-	-	-	-	-	-	-
	DS	f	303	200	142	104	80	63	52
		L/180	-	-	-	-	-	-	-
		L/60	-	-	-	-	-	-	-
	TS	f	368	244	174	129	99	79	65
		L/180	-	-	-	-	-	-	-
		L/60	-	-	-	-	-	-	-

Clips will need to be installed at a 5′-0″ maximum spacing to meet 40psf outward design loads.

Conclusion: Maximum span for roof zone evaluated is 3′-0″.

DESIGN EXAMPLE #5: Roof Installation over 16ga Purlins (calculations)

Conditions:
The ASCE7-10 load combinations produce the following loads:
Outward loads = -60psf
Inward loads = +40psf

Span at which panel/clip capacity exceeds the 60psf uplift requirement per published allowable outward load capacities (independent of fastener/substrate) via product sheets, manufacturer representative, or similar.

	Allowable Outward Loads (lbs/ft²) per Span (ft.-in.)								
Gage	1-0	1-6	2-0	2-6	3-0	3-6	4-0	4-6	5-0
24	189.9	177.0	163.2	148.5	132.8	116.2	98.7	80.3	61.0
22	249.1	219.2	191.7	166.7	144.1	124.1	106.6	91.5	78.9

Panels installed at 5′-0″ exceeds 60psf design loads (panel capacity, not fastener/substrate capacity).

Next, span at which fastener and substrate combination exceeds 60psf uplift requirement.

Nominal fastener pullout strength based on 2007 AISI S100, Equation E4.4.1-1:

$$P_{not} = 0.85 \times t_c \times d \times F_{u2}$$

$$t_c = \text{Substrate thickness} = 0.0590in$$
$$d = \text{Nominal screw diameter } = 0.216in$$
$$F_{u2} = \text{Tensile strength, substrate } = 70,000lb/in^2$$

$$P_{not} = 0.85 \times (0.0590in)(0.216in)(70,000lb/in^2)$$
$$= 758lb$$

Fastener pullout capacity, ASD

$$P_a = \frac{P_{not}}{\Omega} \quad \text{where } \Omega = 3.0$$
$$= \frac{758lb}{3.0} = 252lb$$

Fastener capacity per square foot = $\dfrac{(2\text{ fasteners} \times 252lbs \div 2.0(\text{fastener load adjustment}))}{(1.33ft \times 1.0ft)} = 189psf$

Maximum clip spacing based on fastener/substrate capacity = $189psf \div 60psf = 3.15ft = 3'-2''$

Overall capacity is the minimum of the panel/clip capacity, 5′-0″ and fastener/substrate capacity, 3′-2″

Max span is 3′-0″ (rounded) to meet outward wind load requirements.

Positive loads:

Check for uniform inward (positive) loads using engineering mechanics:

$$\text{Deflection Limit}, \Delta = \frac{L}{60} = \frac{36in}{60} = 0.6in$$

$$W = \frac{(\Delta)(E)(I^{+})}{.0069(L^{4})} = \frac{(29.5x10^{6}\ \text{lb/ in}^{2})(0.1865in^{4}\ /\ \text{ft})(0.6\,\text{in})(12\,\text{in/ ft})}{.0069(36in)^{4}} = 3418\,psf$$

Inward flexural strength:

$$W^{+} = \frac{F_b(S^{+})}{0.08(L)^{2}} = \frac{50000\,lb/in^{2}\,(0.1132\,in^{3}/ft)}{0.08(3\,\text{ft})^{2}}\left(\frac{1ft}{12in}\right) = 655\,psf$$

$$W^{-} = \frac{F_b(S^{-})}{0.10(L)^{2}} = \frac{50000\,lb/in^{2}\,(0.0665\,in^{3}/ft)}{0.10(3\,\text{ft})^{2}}\left(\frac{1ft}{12in}\right) = 308\,psf$$

Limiting condition for positive loading = negative flexural strength = 308psf

Maximum span based on flexural loading = $308\,psf \div 40\,psf = 7.7\,ft \approx 7'-6''$

DESIGN EXAMPLE #6: Drag Loads over Plywood Substrate

Conditions:
Panel: 16in wide Span-lok *hp* 24ga
Substrate: 19/32″ plywood
Combined gravity load: 20psf
Roof Slope: 3:12
Panel Length: 30ft

Determine Drag Load

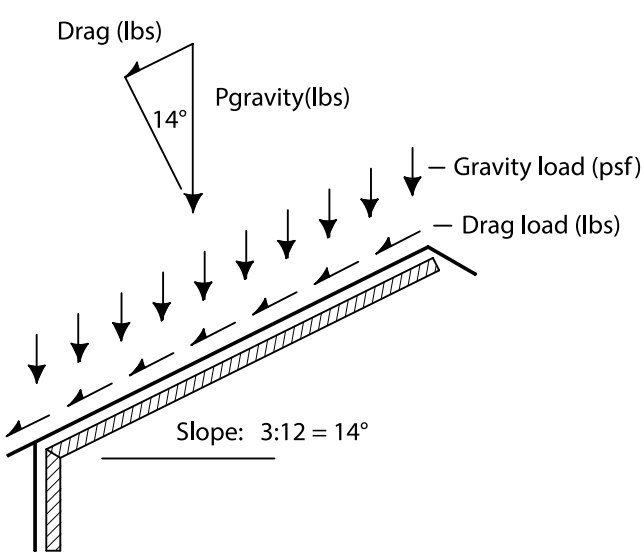

$$P_{snow} = \text{snow load} \times \text{panel length} \times \text{panel width}$$
$$= 20\frac{lbs}{ft^{2}} \times 30\,ft \times 16in\left(\frac{1ft}{12in}\right) = 800lbs$$

$$Drag = \sin(14^{\circ}) \times P_{snow}$$
$$= 0.242 \times 800lbs$$
$$= 194lbs$$

Allowable Fastener Capacities:
Substrate lateral (shear) capacity per 2005 NDS Section 11.3.1
Nominal capacity is the minimum of the following yield modes:

Mode I_m

$$Z = \frac{D(l_m)(F_{em})}{R_d}$$ (Eq 11.3-1), where

D = Diameter = D_r (per 11.3.6) = $0.171in$ (Table L3)

l_m = Dowel bearing length = $19/32" = 0.593in$ *

F_{em} = Member dowel bearing strength = $3350\,lb/in^2$ (Table 11.3.2B)

R_d = Reduction term = $K_d = 10(D) + 0.5$ (Table 11.3.1B)

$= 10(0.171)+0.5 = 2.21$

$$Z = \frac{(0.171in)(0.593in)(3350\,lb/in^2)}{2.21} = 153.7lbs$$

* **NOTE:** Since the substrate thickness provides less than the required 6D screw penetration (as specified in NDS Section 11.1.4.6), the substrate will require support blocking at drag fastener locations to meet this minimum penetration requirement.

Mode I_s

$$Z = \frac{D(l_s)(F_{es})}{R_d}$$ (Eq 11.3-2), where

l_s = Dowel bearing length = $19/32" = 0.0232in$ *

F_{es} = Member dowel bearing strength = $65000\,lb/in^2$ (Table 11.3.2B)

$$Z = \frac{(0.171in)(0.0232in)(65000\,lb/in^2)}{2.21} = 116.7lbs$$

Mode II

$$Z = \frac{k_1 D(l_s)(F_{es})}{R_d}$$ (Eq 11.3-3), where

$$k_1 = \frac{\sqrt{R_e + 2R_e^2(1+R_t+R_t^2) + R_t^2 R_e^3} - R_e(1+R_t)}{(1+R_e)}$$, where

$R_e = F_{em}/F_{es} = 3350/65000 = 0.051$

$R_t = l_m/l_s = 0.593/0.0232 = 25.56$

$k_1 = 0.53$

$$Z = \frac{0.53(0.171in)(0.0232in)(65000\,lb/in^2)}{2.21} = 61.8lbs$$

$Z' = Z \times$ Adjustment Factors (Table 10.3.1)

$= 61.8lb \times C_d = 61.8lb \times 1.15$ (Table 2.3.2)

$= 71lb$

Drag load/Fastener capacity = #fasteners required

$$194lb / (71lb/fastener) = 2.73 \approx 3\,fasteners$$

DESIGN EXAMPLE #7: Drag Loads over Steel Substrate

Conditions:
Same as #6 except using 20ga steel substrate

$\text{Drag} = 194lbs$ (per Example #6)

Allowable Fastener Capacities;

$$t_1 = \text{Panel thickness} = 0.0232in$$
$$t_2 = \text{Substrate thickness} = 0.0359in$$
$$d = \text{Nominal screw diameter } = 0.216in$$
$$F_{u1} = \text{Tensile strength, panel } = 65,000lb/in^2$$
$$F_{u2} = \text{Tensile strength, substrate } = 45,000lb/in^2$$

Shear Resistance:
Per AISI S100 Section E4.3.1, $t_2/t_1 = 0.0359in/0.0232in = 1.55$

a) Tilting of Panel:

$$P_{ns} = 4.2(t_2^3 d)^{1/2}(F_{u2})$$
$$= 4.2(0.0359in^3 x 0.216in)^{1/2} x 45000\, lb/in^2$$
$$= 597lbs$$

b) Bearing of Panel:

$$P_{ns} = 2.7(t_1)(d)(F_{u1})$$
$$= 2.7(0.0232in)(0.216in)(65000\, lb/in^2)$$
$$= 879\,\text{lbs}$$

c) Bearing of Substrate:

$$P_{ns} = 2.7(t_2)(d)(F_{u2})$$
$$= 2.7(0.0359in)(0.216in)(45000\, lb/in^2)$$
$$= 942\,\text{lbs}$$

Because $1.0 \le t_2/t_1 \le 2.5$, P_{ns} is calculated by linear interpolating between min(a,b,c) and the min(b,c):

$$P_{ns} = 597lb + (879lb - 597lb)(\frac{1.55-1}{2.5-1})$$
$$= 700lb$$
$$P_{allow} = 700lb/\Omega = 700lb/3.0 = 233lb$$

Drag load/Fastener capacity = #fasteners required

$194lb / (233\, lb/fastener) = 0.83 \approx 1\, fastener$

NOTE: Although example shows that one fastener has the capacity to withstand drag loads $(233lb > 194lb)$, it should be noted that manufacturer installation guides generally specify (3) fasteners minimum to pin each panel.

DESIGN EXAMPLE #8: Thermal movement
This example calculates thermal movement of the steel roof or wall panel to evaluate proper clip and joggle cleat clearances.

Conditions:
150° maximum anticipated change in panel temperature

Change panel length $= \Delta L = \eta \times \Delta T \times L$, where

$\eta =$ Coefficient of linear expansion, $in/in\ per\ °F$

$= 6.7 \times 10^{-6}\ in/in\ per\ °F$ for steel

$L = P$anel length, in

$\Delta T =$ Maximum anticipated change in panel temperature, $°F$

$$\Delta L = \frac{6.7x10^{-6}\,in}{in°F} \times 150°F \times 30\,ft \times \frac{12in}{1\,ft}$$

$= 0.36$ in thermal movement

DESIGN EXAMPLE #9: Roof Attachment (point loads)
This example calculates the allowable outward (negative) point load evaluated at mid-span.

Conditions:
Panel: 16in wide Span-lok *hp* 24ga
Clip: Low profile clip
Fastener: #12 pan head
Substrate: 19/32″ plywood
Panel attachment spacing: 4ft
Roof attachment device: S-5! #S-5-U Mini roof clamp
Solar roof attachment evaluated at mid span (worst case)

Following the Load Path:

1) **Roof attachment (S-5! roof clamp):**

Allowable capacity loaded normal to panel seam is 849lbs (per S-5! online test results).

2) **Evaluate bending capacity of roof panel using equations of mechanics:**

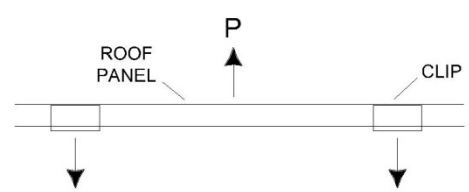

$$M_{MAX} = \frac{P(l)}{8}$$

$$M_{MAX} \le \frac{F_b(\text{Span-lok hp}) \times S^-}{\Omega}$$

$l = \text{Span} = 48in$

$F_b = \text{Failure bending} = 50,000lb/in^2$

$S^- = \text{Negative section modulus} = 0.0665in^3/ft$ (per Span-lok hp product sheets)

$\Omega = 1.67$ (per AISI S100, Chapter C)

$$P_{allowable} = \frac{F_b \times S^- \times (8)}{\Omega(l)} = \frac{50,000lb/in^2 \times 0.0665in^3/ft\ (8)}{1.67\ (48in)}$$

$P_{allowable} = 331.8lb$

3) **Clip/panel capacity:**

Clip capacity derived from panel attachment table.

16" Span-lok hp & SpanSeam, 24ga, with Std. Clip																				
Substrate	Fastener		Attachment Spacing, (ft-in)																	
	# per clip	Size	1' - 0"		1' - 6"		2' - 0"		2' - 6"		3' - 0"		3' - 6"		4' - 0"		4' - 6"		5' - 0"	
			Panel / Clip Negative (Outward) Uniform Load Capacity, (lbs/ft^2)																	
			190	298	174	273	158	248	142	223	126	198	110	173	94	148	77	123	61	98
			Panel System Negative (Outward) Uniform Load Capacity, (lbs/ft^2)																	
			ASD W/**W**	LRFD ϕW	ASD W/**W**	LRFD ϕW	ASD W/**W**	LRFD ϕW	ASD W/**W**	LRFD ϕW	ASD W/**W**	LRFD ϕW	ASD W/**W**	LRFD ϕW	ASD W/**W**	LRFD ϕW	ASD W/**W**	LRFD ϕW	ASD W/**W**	LRFD ϕW

For a 4ft attachment spacing, the panel/clip capacity is 43lbs/ft^2.
Clip tributary area = 4ft x 1.33ft (panel width). 43lbs/ft^2 x 5.33ft^2 = 229lb capacity

4) **Clip-to-substrate capacities:**

Fastener pullout strength per NDS Equation 11.2-2: $2850 \times G^2 \times D$

G = 0.45 (Plywood and OSB) as specified in The Engineered Wood Association APA #TT-051C

$2850 \times 0.45^2 \times 0.216 = 124.6 lbs / in$

ASD Adjustment factors per NDS Table 10.3.1: $C_{tot} = C_D \times C_M \times C_t \times C_{eg} \times C_{tn}$

$C_{tot} = 1.6 \times 1.0 \times 1.0 \times 1.0 \times 1.0 = 1.6$

Fastener pullout capacity = $124.6 \frac{lbs}{in} \times 1.6 \times \frac{19}{32} in = 118.3 lbs$

Determine fastener adjustment factor using engineering mechanics and clip dimensions.

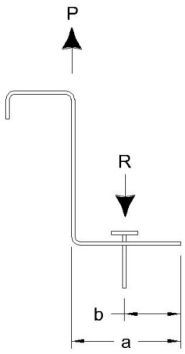

$$R = \frac{P(a)}{(b)}$$

where a=1.56, b=0.96

Fastener adjustment factor = 1.625P

Clip-to-substrate capacity per tributary area = $\frac{(\text{\# fasteners} \times \text{fastener pullout capacity})}{\text{prying factor}}$

$$= \frac{(3 \times 118.3 lbs)}{(1.625)} = 218.4 lbs$$

To summarize the capacity of the load path segments:

1) S-5! roof attachment = 849lbs
2) Panel bending = 331lbs
3) Clip/panel = 229lbs
4) Clip-to-substrate = 218lbs

Based on this analysis, roof attachments (point loads) attached mid-span are limited to 218lbs of negative (outward) loading.

MANUFACTURING FACILITIES:

AEP Span
10905 Beech Avenue
Fontana, CA 92337
800-733-4955

AEP Span
2141 Milwaukee Way
Tacoma, WA 98421
253-383-4955
800-733-4955

CORPORATE HEADQUARTERS:

ASC Profiles LLC
2110 Enterprise Boulevard
West Sacramento, CA 95691
800-360-2477

Visit us at:
www.aepspan.com

S-5!® is a registered trademark of Metal Roof Innovations, Ltd.
AceClamp® is the registered trademark of Innouative Medical products Inc.

©2014 ASC Profiles LLC All rights reserved. July 2014 2M (BRXXX)