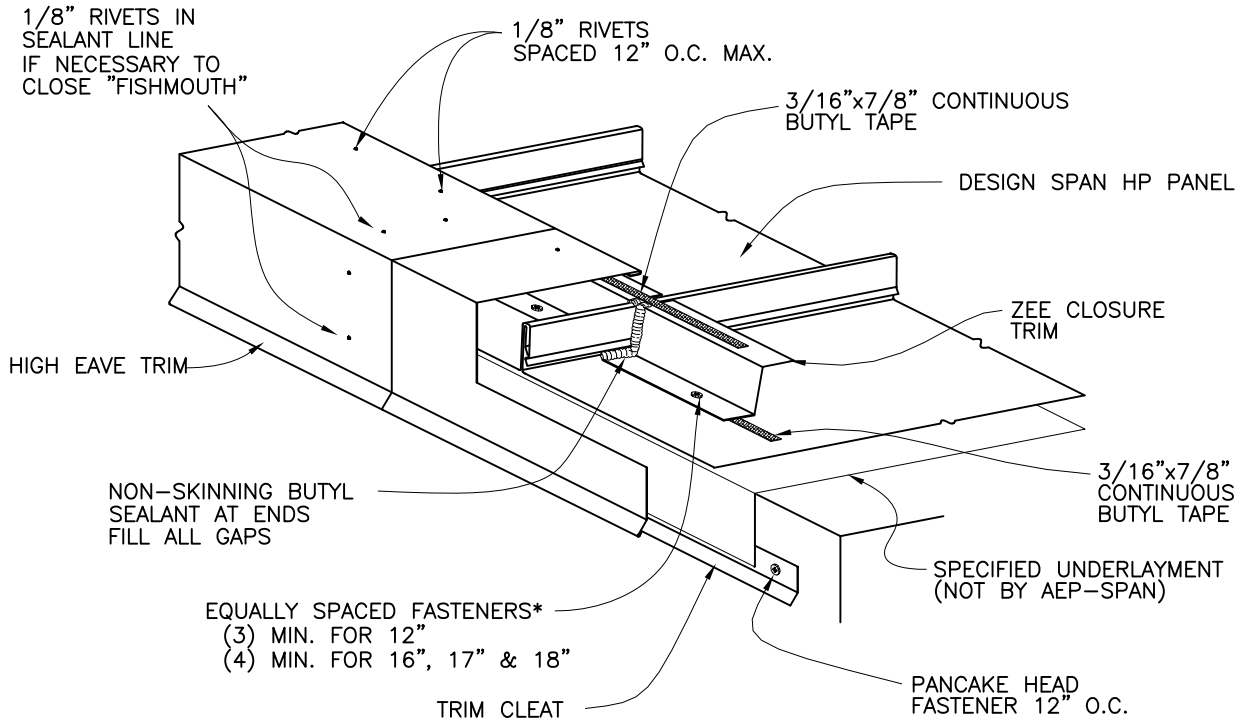

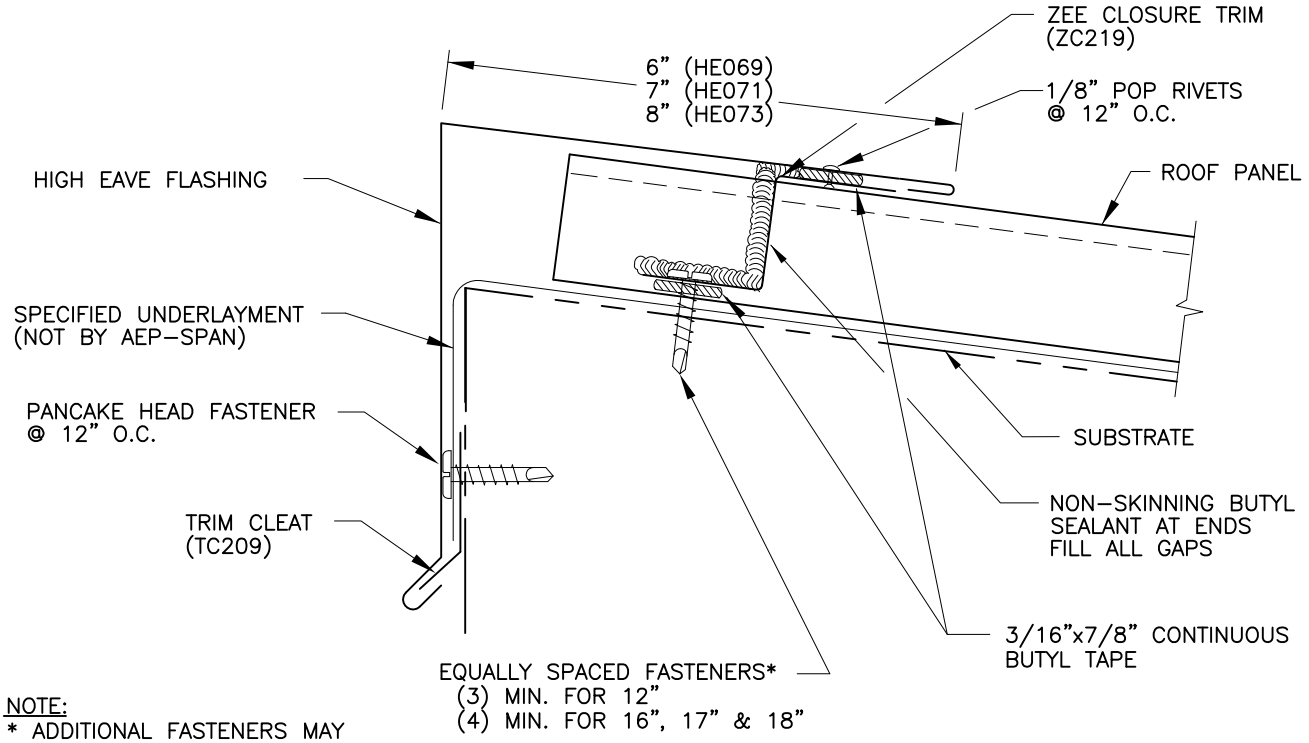

NOTE:
* ADDITIONAL FASTENERS MAY BE REQUIRED IN HIGH SNOW LOAD AREAS. SEE APPENDIX.

AEP SPAN
A BlueScope Steel Company

DESIGN SPAN HP

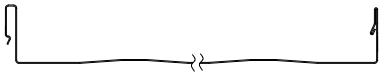

EAVE - HIGH

DS-17

REV. 11/15/12