AEP SPAN

Architectural Trims & Flashings

Drawing Index

for

Architectural Standard Flashings

The drawing index on the following pages provides drawing links to AEP Span's standard Architectural flashings.

If a non-standard (custom) flashing is desired, please use the flashing request form on page 6 to detail desired flashings and forward to your AEP Span Representative.

ANGLE TRIM

AT001 - SS
AT004 - DSHP
AT005 - DS HP BAT
AT007 - (EXP) SS
AT009 - (EXP) DS HP
AT010 - (EXP) SL2, SPS2, DS HP BAT
AT012 - SL2, SPS2
AT013 - (EXP) SL2, SPS2
(EXP = EXPANSION TRIM)

DRIP FLASHING

DF008 - SS
DF009 - PS12
DF010 - SL2, SPS2, DS HP BAT
DF022 - 1.2FX
DF023 - 1.2FX (1/2" S.O.)
DF024 - 1.5FX
DF025 - 1.5FX (1/2" S.O.)
DF026 - TW-12, PC
DF027 - TW-12, PC (1/2" S.O.)

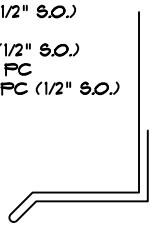

DRIP FLASHING

DF012 - SS
DF013 - DS HP
DF014 - SL2, SPS2, DS HP BAT
DF017 - PS12
DF019 - FP

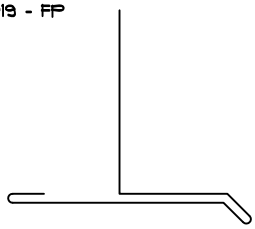

DRIP FLASHING

DF016 - PS12
DF018 - FP

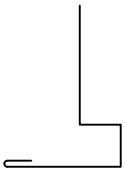

DRIP @ SOFFIT

DF028 - 1.2FX
DF029 - 1.2FX (1/2" S.O.)
DF030 - 1.5FX
DF031 - 1.5FX (1/2" S.O.)
DF032 - TW12, PC
DF033 - TW12, PC (1/2" S.O.)

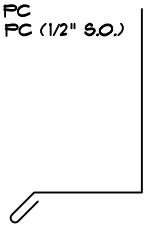

DOWNSPOUT

DS020 - LARGE DOWNSPOUT (10'-0")
DS022 - SMALL DOWNSPOUT (10'-0")

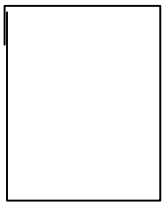

DOWNSPOUT SPLICE

DS024 - LARGE DOWNSPOUT SPLICE
DS025 - SMALL DOWNSPOUT SPLICE
(DOWNSPOUT SPLICE 0'-6" LONG)

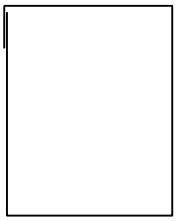

DOWNSPOUT STRAP

DS026 - LARGE DOWNSPOUT STRAP
DS027 - SMALL DOWNSPOUT STRAP
(DOWNSPOUT STRAP 0'-2" LONG)

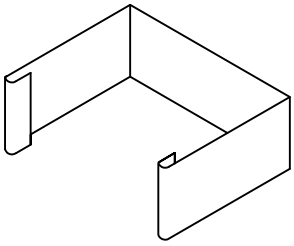

BOX GUTTER

EG029 - LARGE BOX GUTTER (10'-0")
EG031 - SMALL BOX GUTTER (10'-0")

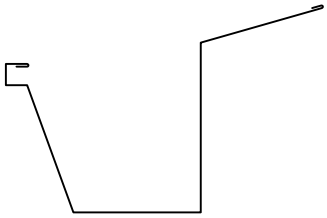

BULLNOSE EAVE TRIM

ET033 - EAVE TRIM (3" VL) (10'-0")
ET035 - EAVE TRIM (4" VL) (10'-0")
(VL = VERTICAL LEG)

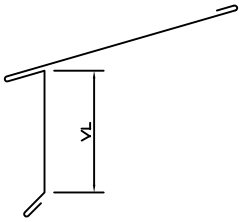

BULLNOSE EAVE TRIM

ET037 - EAVE TRIM (3" VL) (10'-0")
ET039 - EAVE TRIM (4" VL) (10'-0")
(VL = VERTICAL LEG)

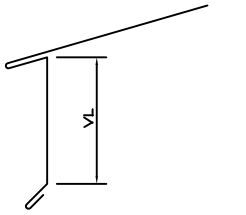

EAVE TRIM W/OUT GUTTER

ET041 - EAVE TRIM (3" VL) (10'-0")
ET043 - EAVE TRIM (4" VL) (10'-0")
(VL = VERTICAL LEG)

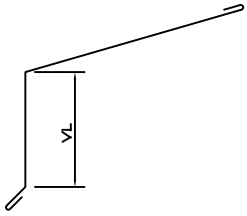

EAVE TRIM W/GUTTER

ET045 - EAVE TRIM (3" VL) (10'-0")
ET047 - EAVE TRIM (4" VL) (10'-0")
(VL = VERTICAL LEG)

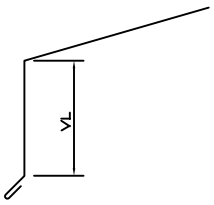

EAVE TRIM W/GUTTER

ET049 - EAVE TRIM (10'-0")

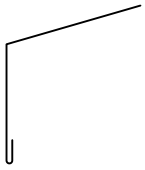

EXPANSION TRIM

EX053 - SS
EX055 - DS HP
EX056 - SL2, SPS2, DSHP BAT

FASCIA/SOFFIT TRIM

FT053 - (3" VL) (1 1/2" HL)
FT054 - (4" VL) (1 1/2" HL)
FT055 - (3" VL) (3" HL)
FT056 - (4" VL) (3" HL)
(HL = HORIZONTAL LEG)
(VL = VERTICAL LEG)

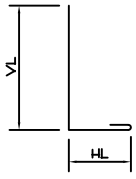

BOX GUTTER END CAP

GC057 - LARGE GUTTER E.C.(LEFT)
GC058 - LARGE GUTTER E.C.(RIGHT)
GC059 - SMALL GUTTER E.C.(LEFT)
GC060 - SMALL GUTTER E.C.(RIGHT)
(E.C. = END CAP)

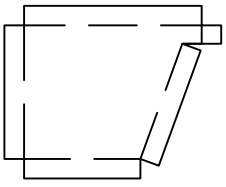

ROOFOVER GUTTER FLASHING

GF061 - GUTTER FLASHING (10'-0")

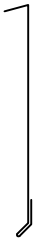

STANDARD GUTTER STRAP

GS063 - GUTTER STRAP (10'-0")

NOT USED

FILL IN INFO

DATE: 03/22/02	FILE NAME: *-RTQG		
DRAWN BY: MDL	REV.	DATE	
SHEET: RTQG-1	8	08/01/16 bmg	

AEP SPAN

THIS DRAWING IS THE PROPERTY OF ASC PROFILES LLC. THE USE OF THIS DRAWING WITHOUT THE WRITTEN CONSENT OF ASC PROFILES LLC IS PROHIBITED.

SPAN-LOK GUTTER STRAP

GS064 - SL2, SL3 (10'-0")

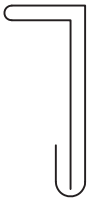

GRAVEL STOP

GT065 - (5" VL) (10'-0")
GT067 - (6" VL) (10'-0")
(VL = VERTICAL LEG)

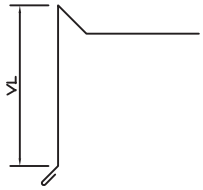

NON-VENTED HIGH EAVE TRIM

HE069 - (6" DL) (10'-0")
HE071 - (7" DL) (10'-0")
HE073 - (8" DL) (10'-0")
(DL = DIAGONAL LEG)

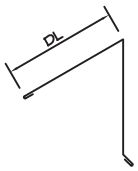

VENTED HIGH EAVE TRIM

HE075 - (10'-0") 1/4:12 TO 6:12
HE077 - (10'-0") 6 1/4:12 TO 12:12

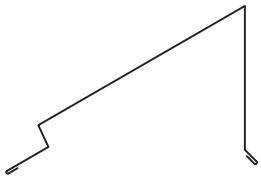

NON-VENTED HIGH EAVE TRIM

HE079 - GF (10'-0") 1/4:12 TO 6:12
HE081 - GF (10'-0") 6 1/4:12 TO 12:12

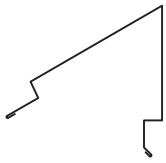

HEADER TRIM

HT085 - DS HP (10'-0")
HT087 - SL2, SPS2 (10'-0")
HT089 - SL3, SPS3 (10'-0")

HEADER TRIM

HT090 - PS12
HT092 - FP, TW12, PC
HT096 - 1.2FX
HT097 - 1.2FX (1/2" S.O.)
HT098 - 1.5FX
HT099 - 1.5FX (1/2" S.O.)
HT103 - TW12, PC (1/2" S.O.)

DOOR / WINDOW HEADER

HT091 - PS12, 1.5FX
HT093 - FP, TW12, PC
HT095 - 1.2FX
HT100 - 1.2FX (1/2" S.O.)
HT101 - 1.5FX (1/2" S.O.)
HT102 - TW12, PC (1/2" S.O.)

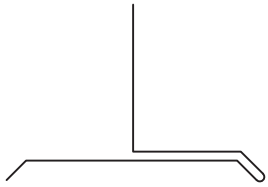

INSIDE CORNER TRIM

IC091 - ALL PROFILES (10'-0")
(EXCLUDING PS12)
(DISCONTINUED)

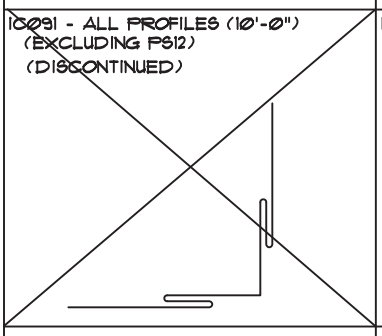

INSIDE CORNER TRIM

IC093 - PS12, FP, FX, TW12, PC (10'-0")

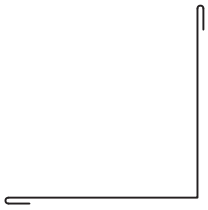

JOGGLE CLEAT

JC095
JC096 - WALL ST. CLEAT

"J" STARTER

JS096

"J" TRIM

JT097 - NW
JT098 - SS
JT099 - DS HP
JT100 - SL2, SPS2, DS HP BAT
JT107 - PS12, 1.5FX
JT108 - FP, TW12, PC
JT109 - 1.2FX
JT110 - 1.2FX (1/2" S.O.)
JT111 - 1.5FX (1/2" S.O.)
JT112 - TW12 (1/2" S.O.)

"J" TRIM

JT102 - NW
JT103 - SS
JT104 - DS HP
JT105 - SL2, SPS2, DS HP BAT,

MITER TRIM

MT107 - NW
MT108 - SUPER SPAN
MT109 - PS12, 1.5FX
MT110 - FP, TW12, PC
MT111 - 1.2FX
MT112 - 1.2FX (1/2" S.O.)
MT113 - 1.5FX (1/2" S.O.)
MT114 - TW12, PC (1/2" S.O.)

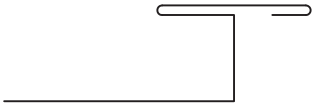

OUTSIDE CORNER

OC109 - ALL PROFILES (10'-0")
(EXCLUDING PS12)
(DISCONTINUED)

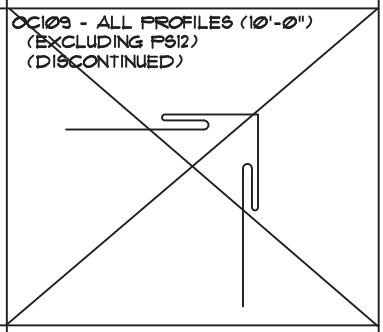

OUTSIDE CORNER

OC111 - PS12, FP, FX, TW12, PC (10'-0")

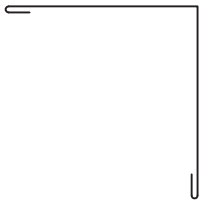

NON-VENTED PITCH BREAK

PB113 - (6"DL) (10'-0")
PB115 - (7"DL) (10'-0")
PB117 - (8"DL) (10'-0")
(DL = DIAGONAL LEG)

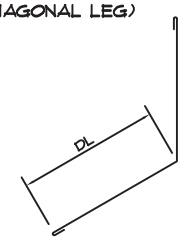

PITCH BREAK

PB119 - (10'-0") 1/4:12 TO 6:12 (V)
PB121 - (10'-0") 6 1/4:12 TO 12:12 (V)
PB123 - (10'-0") 1/4:12 TO 6:12 (NV)
PB125 - (10'-0") 6 1/4:12 TO 12:12 (NV)
(V = VENTED)
(NV = NON-VENTED)

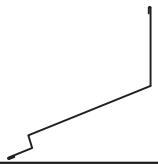

NOT USED

FILL IN INFO

DATE: 03/22/02	FILE NAME: *-RTQG		
DRAWN BY: MDL	REV.	DATE	
SHEET:	8	08/01/16 bmg	
RTQG-2			

AEP SPAN

THIS DRAWING IS THE PROPERTY OF ASC PROFILES LLC. THE USE OF THIS DRAWING WITHOUT THE WRITTEN CONSENT OF ASC PROFILES LLC IS PROHIBITED.

(PARAPET) COPING CAP

PC129 - (10" DL) (10'-0")
PC131 - (12" DL) (10'-0")
PC133 - (14" DL) (10'-0")
(DL = DIAGONAL LEG)

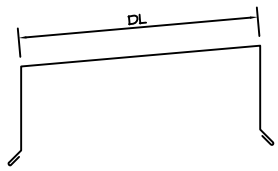

PANEL RECEIVER

PR135 - SS
PR138 - DS HP
PR139 - DS HP BAT
PR145 - SL2, SPS2

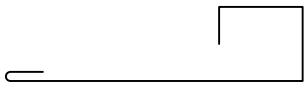

OFFSET PANEL RECEIVER

PR143 - SL3, SPS3 W/ 3 1/2" CLIP
PR144 - SL3, SPS3 W/ 4" CLIP
PR146 - SL2, SPS2 W/ 2 1/2"
PR147 - SL2, SPS2 W/ 3"

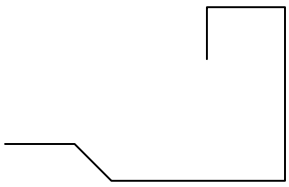

SAW CUT REGLET

RG145 - (4" VL) (10'-0")
RG147 - (5" VL) (10'-0")
RG149 - (6" VL) (10'-0")
(VL = VERTICAL LEG)

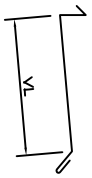

SAW CUT REGLET

RG151 - (4" VL) (10'-0")
RG153 - (5" VL) (10'-0")
RG155 - (6" VL) (10'-0")
(VL = VERTICAL LEG)

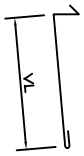

SURFACE MOUNTED REGLET

RG157 - (10'-0")

MASONRY BASE REGLET

RG160 - (10'-0")

RIDGE/HIP CAP NON-VENTED

RH162 - (6" DL) (10'-0")
RH164 - (7" DL) (10'-0")
RH166 - (8" DL) (10'-0")
(DL = DIAGONAL LEG)

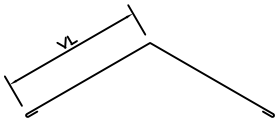

RIDGE/HIP CAP VENTED

RH168 - (10"DLX10'-0") 1/4:12 TO 6:12
RH170 - (12"DLX10'-0") 6 1/4:12 TO 12:12
(DL = DIAGONAL LEG)

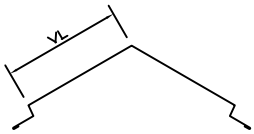

RIDGE/HIP CAP VENTED FIXED

RH172 - USED W/PREVENT (10'-0")

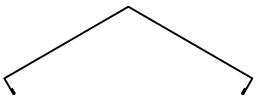

RIDGE/HIP CAP VENTED FLOATING

RH174 - USED W/PREVENT (10'-0")

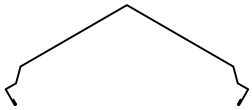

STD RAKE TRIM

RT175 - (4"VL) (10'-0")
RT177 - (5"VL) (10'-0")
RT179 - (4 1/4"VL) (10'-0")
RT181 - (5 1/4"VL) (10'-0")
RT183 - (4 1/2"VL) (10'-0")
RT185 - (5 1/2"VL) (10'-0")
RT187 - (4 3/4"VL) (10'-0")
RT189 - (5 3/4"VL) (10'-0")
RT191 - (5"VL) (10'-0")
RT193 - (6"VL) (10'-0")
RT195 - (7"VL) (10'-0")

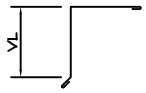

ALTERNATE RAKE TRIM

RT197 - (3"VL) (10'-0")
RT199 - (4"VL) (10'-0")
(VL = VERTICAL LEG)

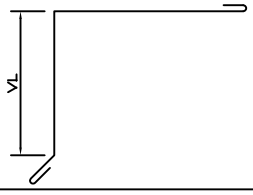

STD RAKEWALL TRIM

RW201 - (3 1/2"HL) (10'-0")
RW203 - (6"HL) (10'-0")
(HL = HORIZONTAL LEG)

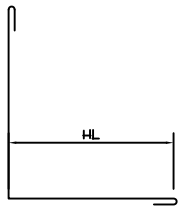

EXPANSION RAKEWALL TRIM

RW205 - (10'-0")

ALTERNATE RAKEWALL TRIM

RW207 - (10'-0")

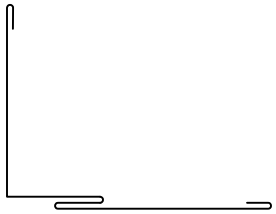

RAKEWALL TRIM

RW209 - SS
RW212 - DS HP
RW213 - DS HP BAT
RW215 - SL2, SPS2

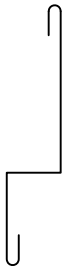

SL2, SN, SPS2 SEAM-COVERS

SL2RC__2 - SL2 INSIDE/OUT
SPS2RC__2 - SPS2 INSIDE/OUT

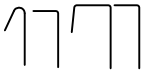

TRIM CLEAT

TC209 - (10'-0")

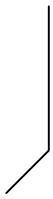

NOT USED

FILL IN INFO

DATE: 03/22/02	FILE NAME: *-RTQG		
DRAWN BY: MDL	REV.	DATE	
SHEET:	8	08/01/16 bmg	
RTQG-3			

AEP SPAN

THIS DRAWING IS THE PROPERTY OF ASC PROFILES LLC. THE USE OF THIS DRAWING WITHOUT THE WRITTEN CONSENT OF ASC PROFILES LLC IS PROHIBITED.

STANDARD VALLEY FLASHING		VALLEY FLASHING FOR CURVED APPLICATIONS	EAVE VENT TRIM
VF210 - (10'-0") 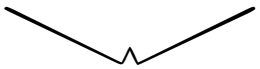		VF212 - (10'-0") 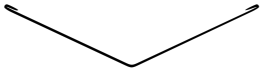	VT214 - (10'-0") 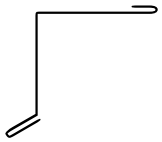
WALL CLOSURE	WALL CLOSURE	WALL CLOSURE	ZEE CLOSURE
WC215 - FP (10'-0") 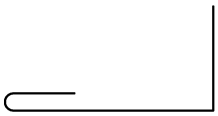	WC216 - PS12 (10'-0") 	WC217 - PS12, FP (10'-0") 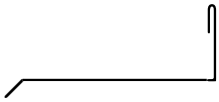	ZC216 - SS ZC219 - DS HP ZC220 - DSHP BAT. ,12FX (1/2" S.O.) ZC223 - SL2 ZC224 - PS12, 15FX ZC225 - FP, TW12, PC ZC226 - 12FX ZC227 - 15FX (1/2" S.O.) ZC228 - TW12 (1/2" S.O.) 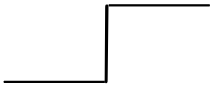
NOT USED	NOT USED	NOT USED	NOT USED
FILL IN INFO	FILL IN INFO	FILL IN INFO	FILL IN INFO
NOT USED	NOT USED	NOT USED	NOT USED
FILL IN INFO	FILL IN INFO	FILL IN INFO	FILL IN INFO
NOT USED	NOT USED	NOT USED	NOT USED
FILL IN INFO	FILL IN INFO	FILL IN INFO	FILL IN INFO

DATE: 03/22/02	FILE NAME: 0-RTQG			THIS DRAWING IS THE PROPERTY OF ASC PROFILES LLC. THE USE OF THIS DRAWING WITHOUT THE WRITTEN CONSENT OF ASC PROFILES LLC IS PROHIBITED.
DRAWN BY: MDL	REV. / DATE	AEP SPAN		
SHEET: RTQG-4	8 / 08/01/16 bmg			

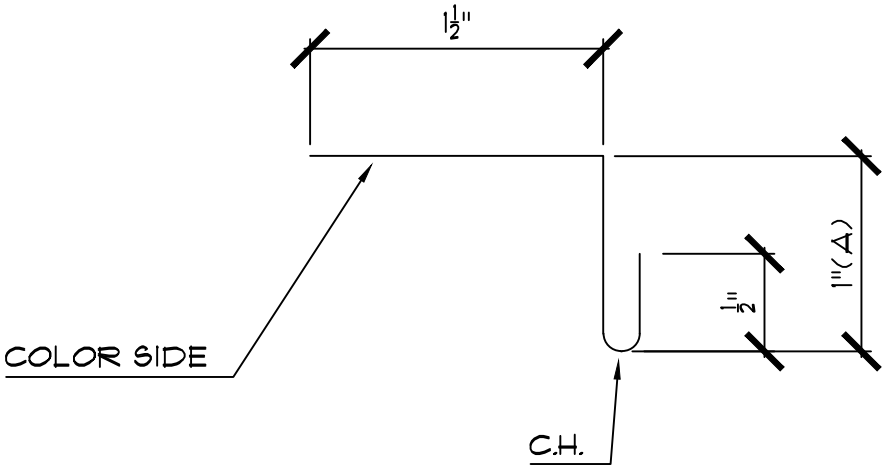

GAUGE:	STRETCH-OUT: 3"	PART #: AT001
COLOR:	# OF BREAKS: 3	PART NAME: ANGLE TRIM
LENGTH: 10'-0"	QUANTITY:	

CUSTOMER:	DRAWN BY:	AEP SPAN
JOB NAME:	DATE:	
AEPS ORDER #:	ACCEPTED BY:	
	DATE:	

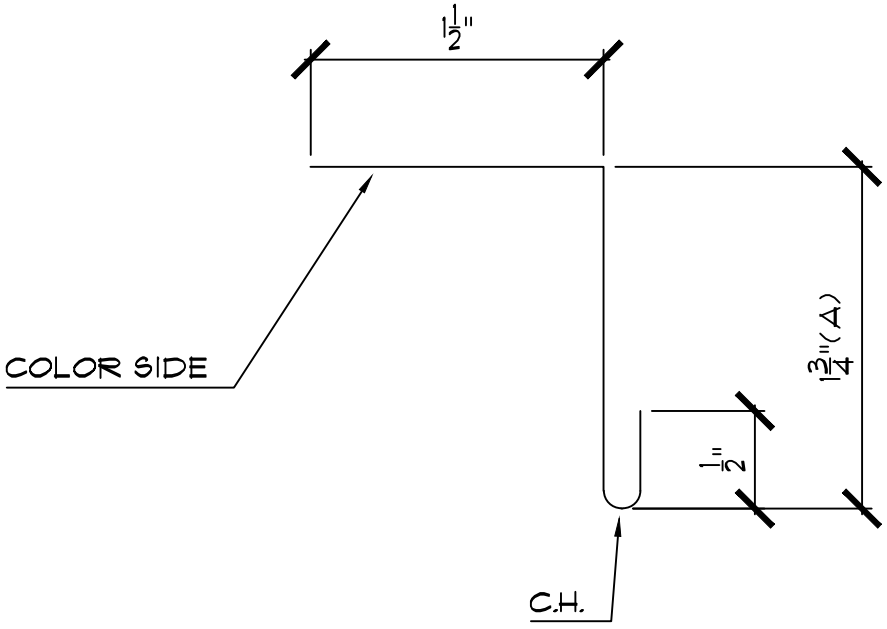

GAUGE:	STRETCH-OUT: 3 3/4"	PART #: AT004
COLOR:	# OF BREAKS: 3	PART NAME:
LENGTH: 10'-0"	QUANTITY:	ANGLE TRIM

CUSTOMER:	DRAWN BY:	AEP SPAN
JOB NAME:	DATE:	
AEPS ORDER #:	ACCEPTED BY:	
	DATE:	

Return to Menu

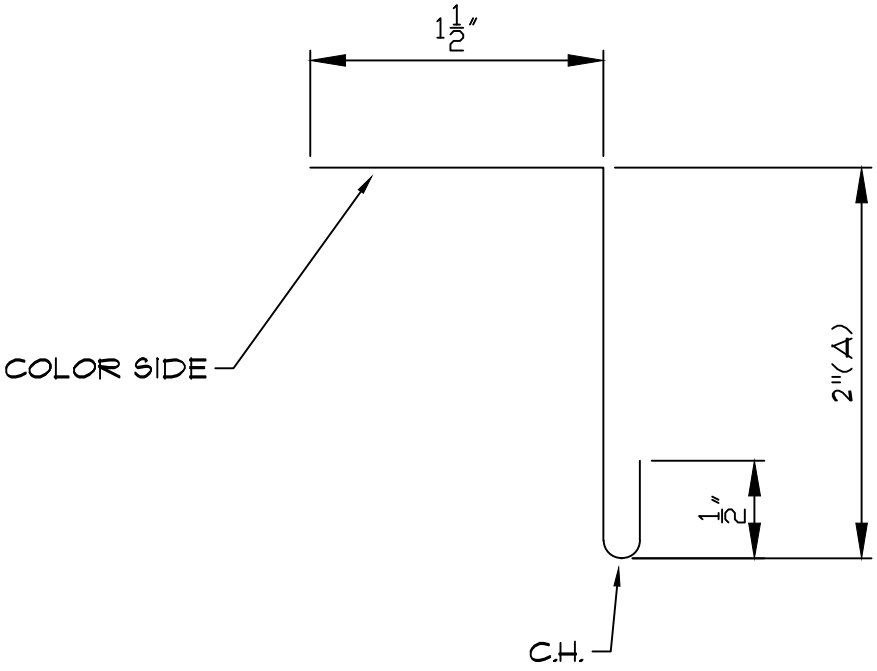

GAUGE:	STRETCH-OUT: 4"	PART #: AT005
COLOR:	# OF BREAKS: 3	PART NAME:
LENGTH: 10'-0"	QUANTITY:	ANGLE TRIM

CUSTOMER:	DRAWN BY:	AEP SPAN
JOB NAME:	DATE:	
AEPS ORDER #:	ACCEPTED BY:	
	DATE:	

Return to Menu

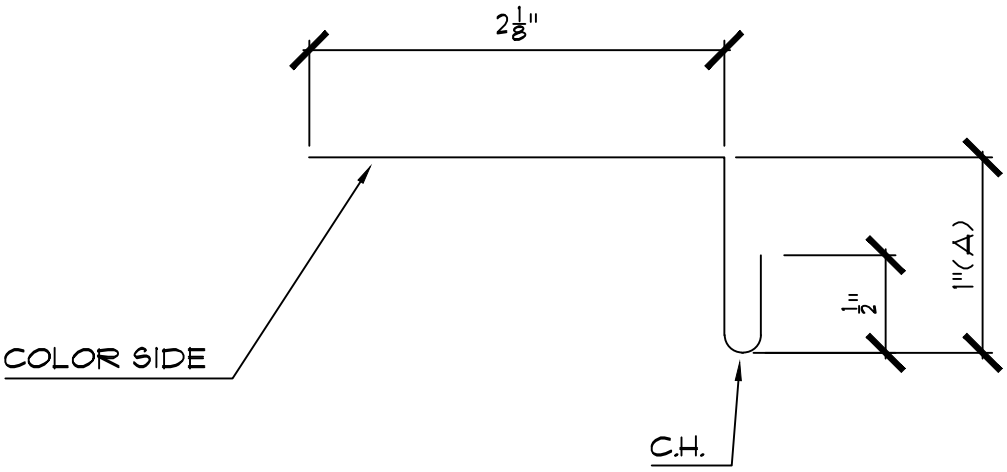

GAUGE:	STRETCH-OUT: 3 5/8"	PART #: AT007
COLOR:	# OF BREAKS: 3	PART NAME:
LENGTH: 10'-0"	QUANTITY:	EXPANSION ANGLE TRIM

CUSTOMER:	DRAWN BY:	AEP SPAN
JOB NAME:	DATE:	
AEPS ORDER #:	ACCEPTED BY:	
	DATE:	

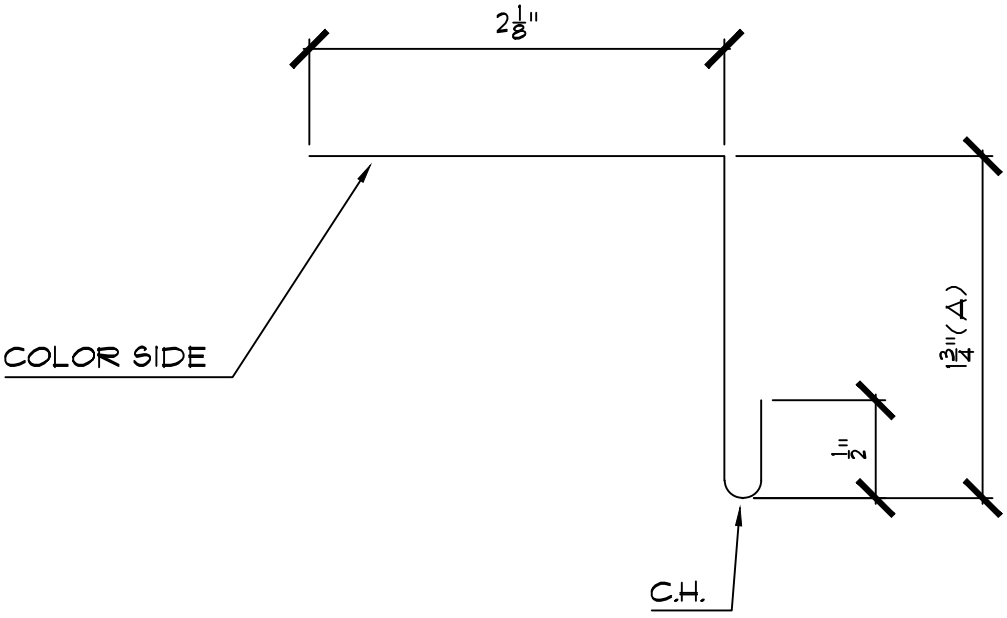

GAUGE:	STRETCH-OUT: 4 3/8"	PART #: AT009
COLOR:	# OF BREAKS: 3	PART NAME:
LENGTH: 10'-0"	QUANTITY:	EXPANSION ANGLE TRIM

CUSTOMER:	DRAWN BY:	AEP SPAN
JOB NAME:	DATE:	
AEPS ORDER #:	ACCEPTED BY:	
	DATE:	

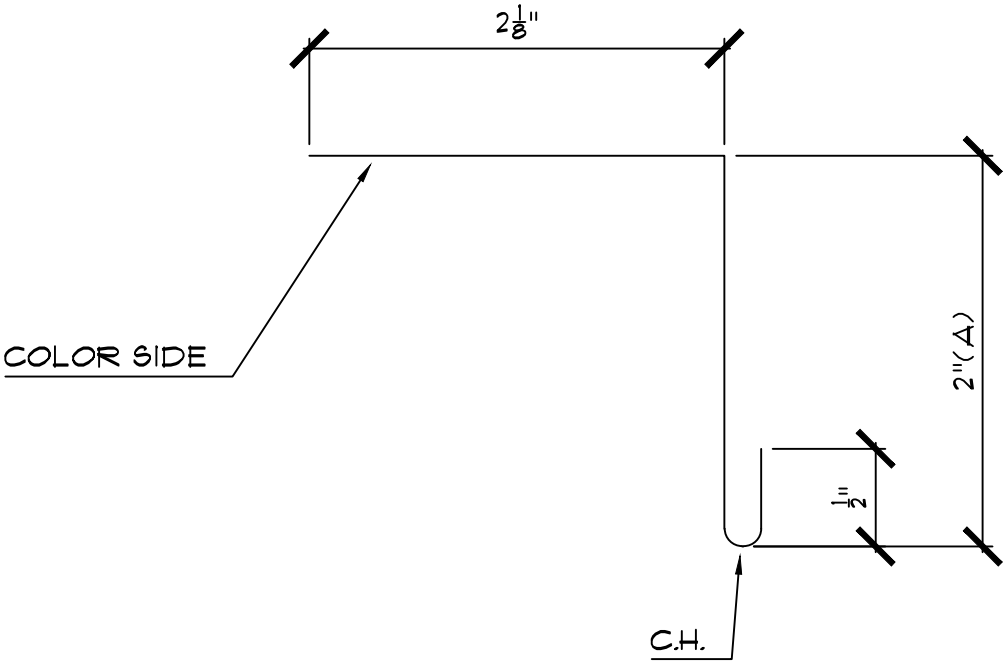

GAUGE:	STRETCH-OUT: 4 5/8"	PART #: AT010
COLOR:	# OF BREAKS: 3	PART NAME:
LENGTH: 10'-0"	QUANTITY:	EXPANSION ANGLE TRIM

CUSTOMER:	DRAWN BY:	AEP SPAN
JOB NAME:	DATE:	
AEPS ORDER #:	ACCEPTED BY:	
	DATE:	

Return to Menu

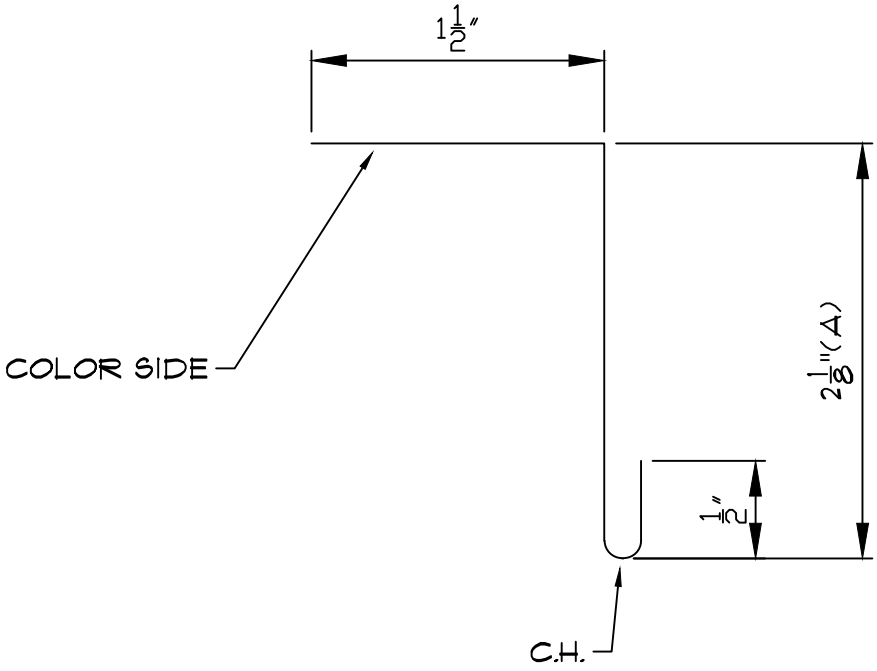

GAUGE:	STRETCH-OUT: 4 1/8"	PART #: AT012
COLOR:	# OF BREAKS: 3	PART NAME:
LENGTH: 10'-0"	QUANTITY:	ANGLE TRIM

CUSTOMER:	DRAWN BY:	AEP SPAN
JOB NAME:	DATE:	
AEPS ORDER #:	ACCEPTED BY:	
	DATE:	

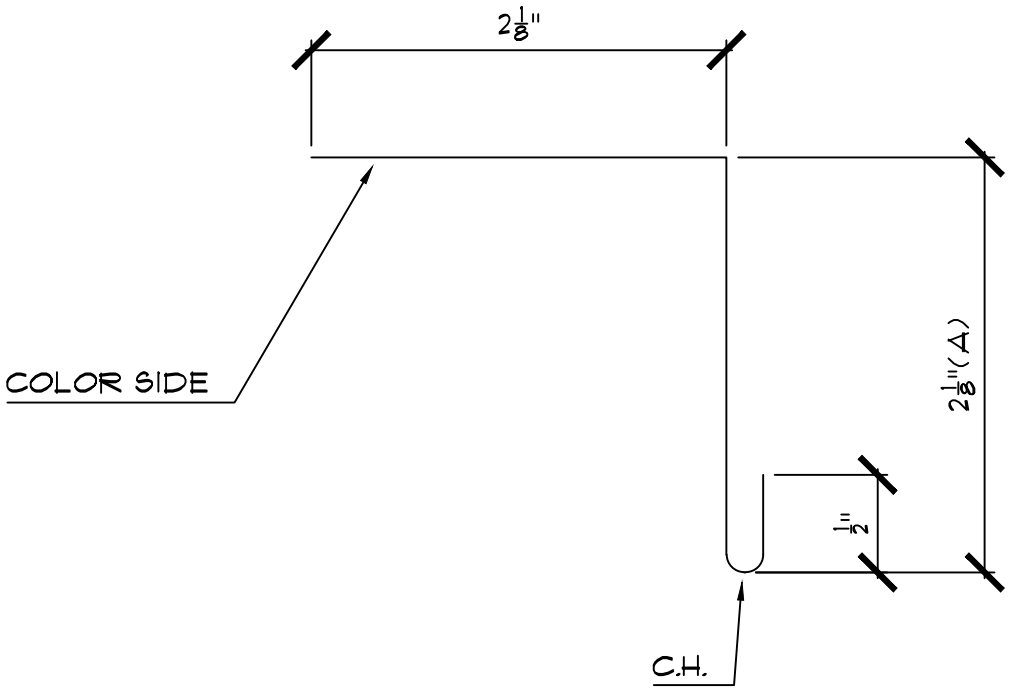

GAUGE:	STRETCH-OUT: 4 3/4"	PART #: AT013
COLOR:	# OF BREAKS: 3	PART NAME:
LENGTH: 10'-0"	QUANTITY:	EXPANSION ANGLE TRIM

CUSTOMER:	DRAWN BY:	AEP SPAN
JOB NAME:	DATE:	
AEPS ORDER #:	ACCEPTED BY:	
	DATE:	

Return to Menu

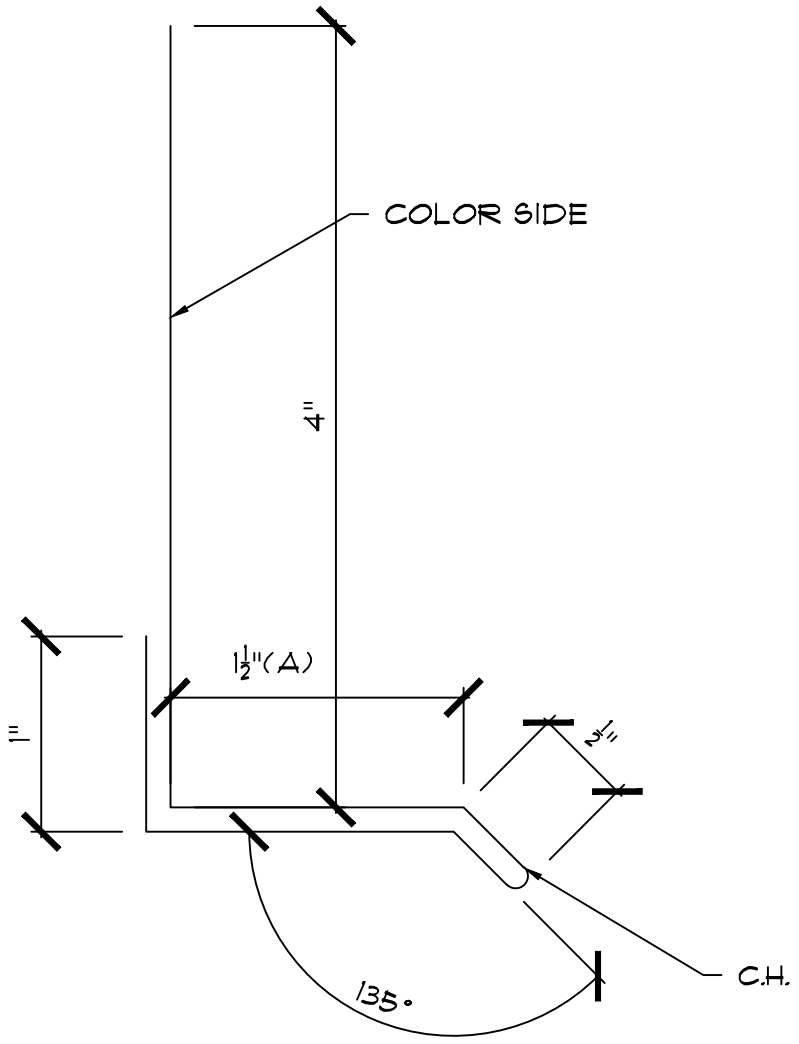

GAUGE:	STRETCH-OUT: 9"	PART #: DF008
COLOR:	# OF BREAKS: 6	PART NAME:
LENGTH: 10'-0"	QUANTITY:	DRIP FLASHING

CUSTOMER:	DRAWN BY:	AEP SPAN
JOB NAME:	DATE:	
AEPS ORDER #:	ACCEPTED BY:	
	DATE:	

Return to Menu

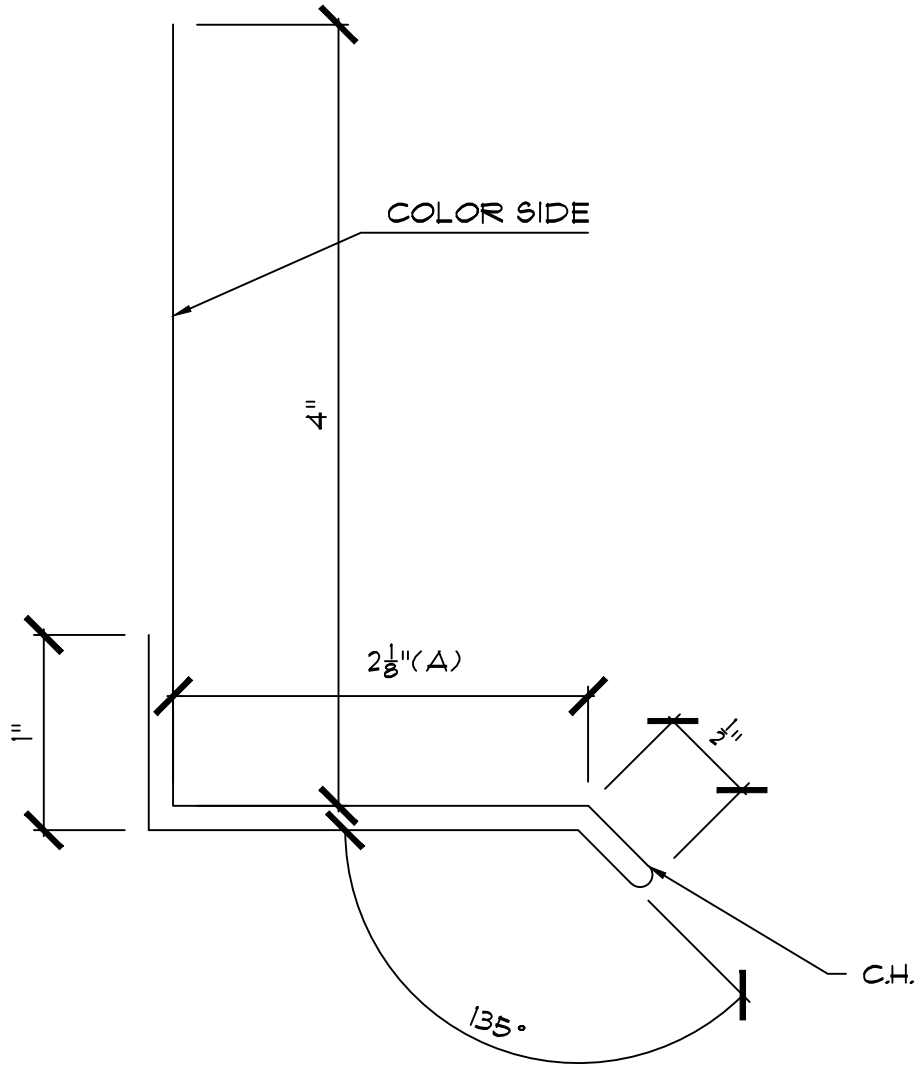

GAUGE:	STRETCH-OUT: 10 1/4"	PART #: DF009
COLOR:	# OF BREAKS: 6	PART NAME:
LENGTH: 10'-0"	QUANTITY:	DRIP FLASHING

CUSTOMER:	DRAWN BY:	AEP SPAN
JOB NAME:	DATE:	
AEPS ORDER #:	ACCEPTED BY:	
	DATE:	

Return to Menu

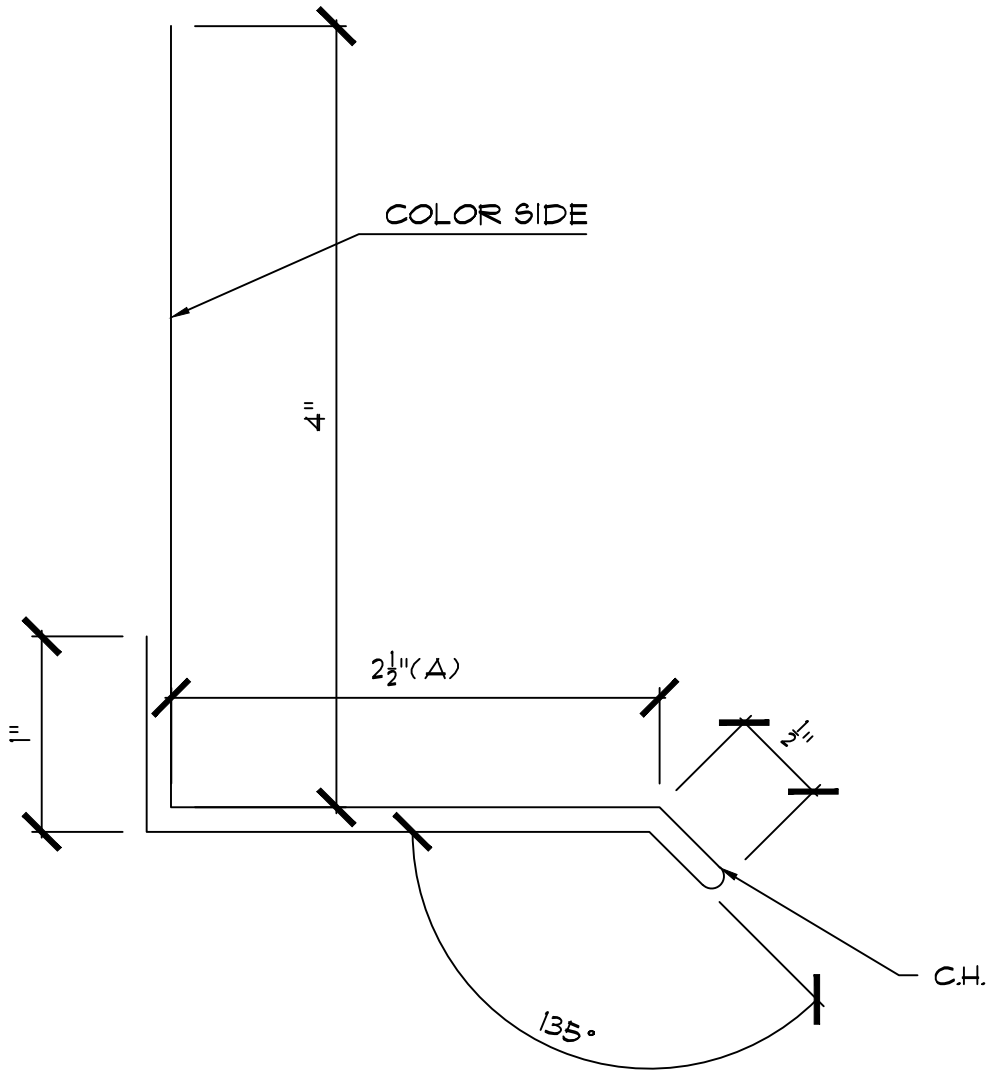

GAUGE:	STRETCH-OUT: 11"	PART #: DF010
COLOR:	# OF BREAKS: 6	PART NAME:
LENGTH: 10'-0"	QUANTITY:	DRIP FLASHING

CUSTOMER:	DRAWN BY:	AEP SPAN
JOB NAME:	DATE:	
AEPS ORDER #:	ACCEPTED BY:	
	DATE:	

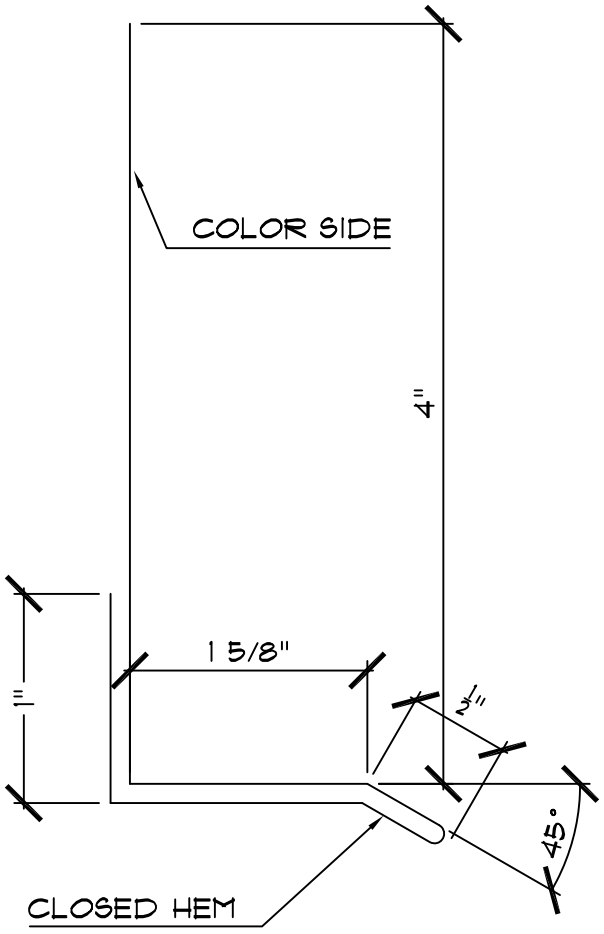

GAUGE:	STRETCH-OUT: 9 1/4"	PART #: DF022
COLOR:	# OF BREAKS: 6	PART NAME: DRIP
LENGTH: 10'-0"	QUANTITY:	

CUSTOMER:	DRAWN BY: BMG	AEP SPAN
JOB NAME:	DATE: 08/01/16	
AEPS ORDER #:	ACCEPTED BY:	
	DATE:	

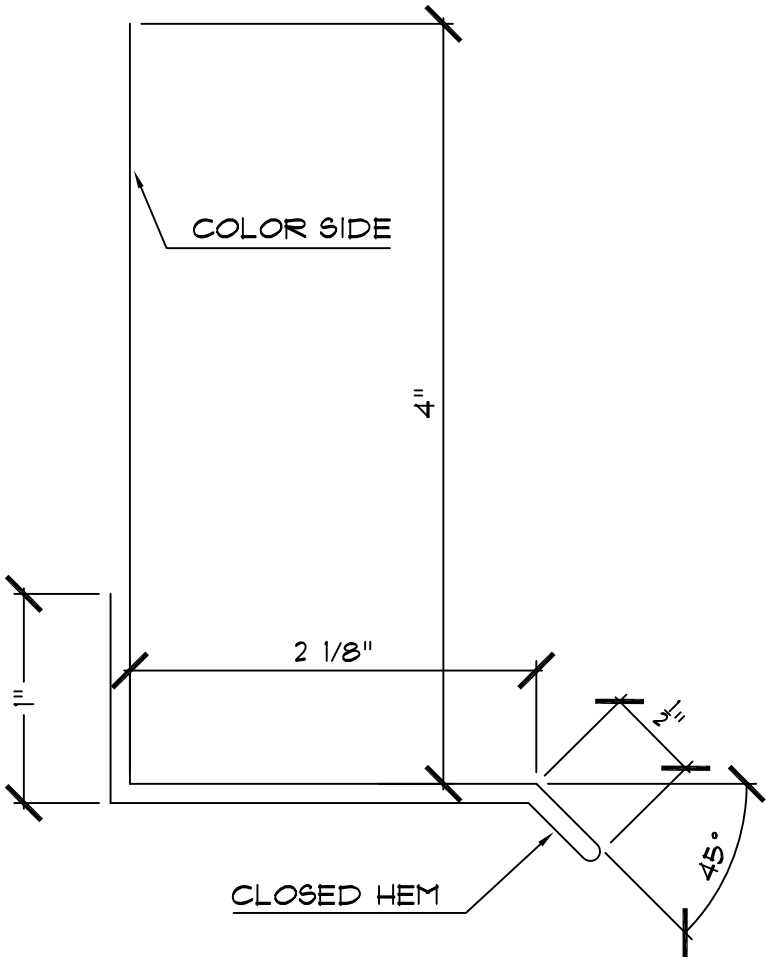

GAUGE:	STRETCH-OUT: 10 1/4"	PART #: DF023
COLOR:	# OF BREAKS: 6	PART NAME: DRIP
LENGTH: 10'-0"	QUANTITY:	

CUSTOMER:	DRAWN BY: BMG	AEP SPAN
JOB NAME:	DATE: 08/01/16	
AEPS ORDER #:	ACCEPTED BY:	
	DATE:	

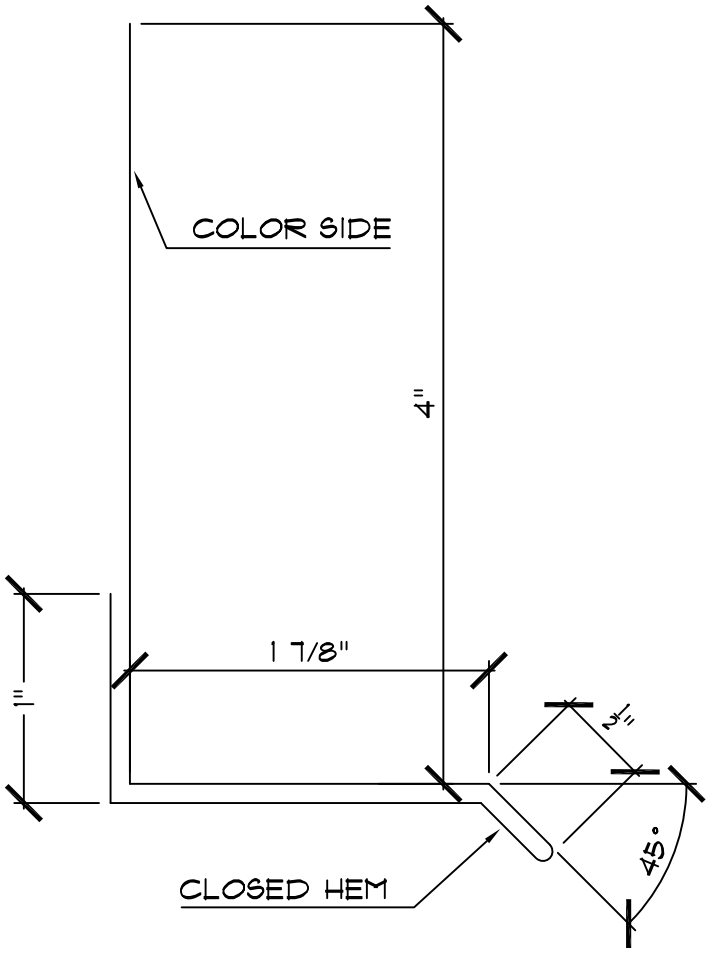

GAUGE:	STRETCH-OUT: 9 3/4"	PART #: DF024
COLOR:	# OF BREAKS: 6	PART NAME: DRIP
LENGTH: 10'-0"	QUANTITY:	

CUSTOMER:	DRAWN BY: BMG	AEP SPAN
JOB NAME:	DATE: 08/01/16	
AEPS ORDER #:	ACCEPTED BY:	
	DATE:	

Return to Menu

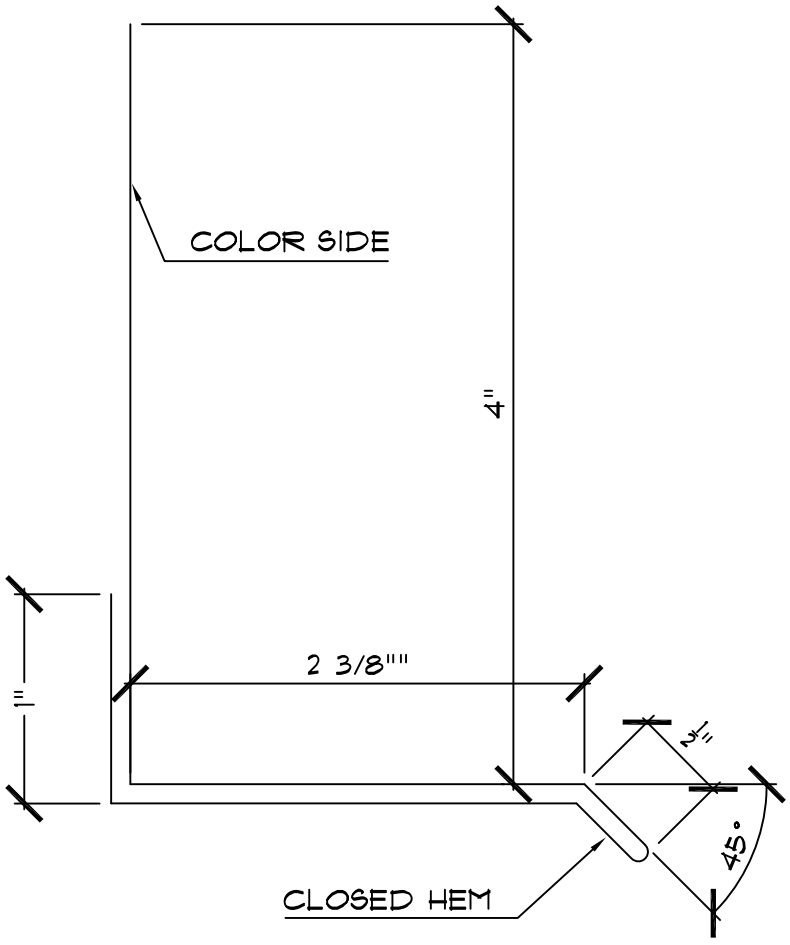

GAUGE:	STRETCH-OUT: 10 3/4"	PART #: DF025
COLOR:	# OF BREAKS: 6	PART NAME: DRIP
LENGTH: 10'-0"	QUANTITY:	

CUSTOMER:	DRAWN BY: BMG	AEP SPAN
JOB NAME:	DATE: 08/01/16	
AEPS ORDER #:	ACCEPTED BY:	
	DATE:	

Return to Menu

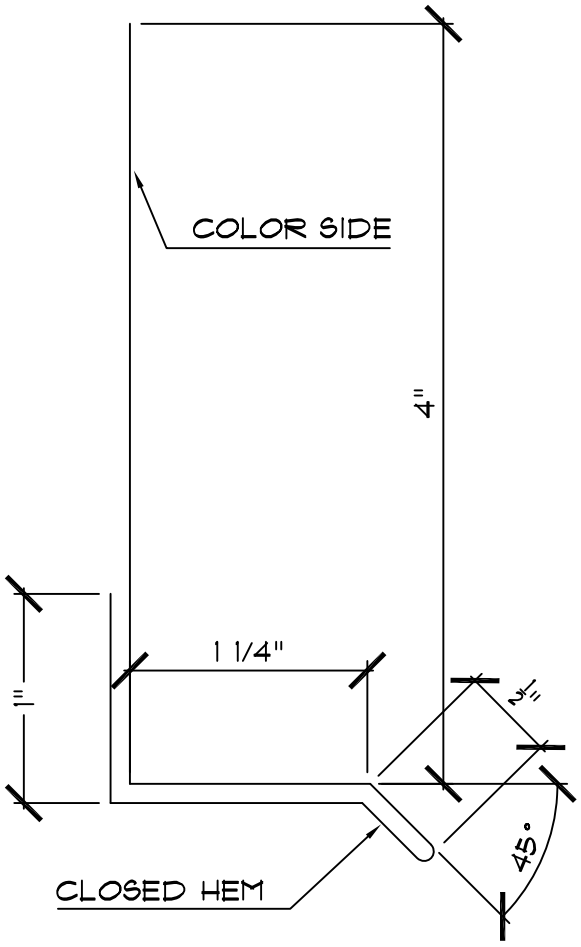

GAUGE:	STRETCH-OUT: 8 1/2"	PART #: DF026
COLOR:	# OF BREAKS: 6	PART NAME: DRIP
LENGTH: 10'-0"	QUANTITY:	

CUSTOMER:	DRAWN BY: BMG	AEP SPAN
JOB NAME:	DATE: 08/01/16	
AEPS ORDER #:	ACCEPTED BY:	
	DATE:	

Return to Menu

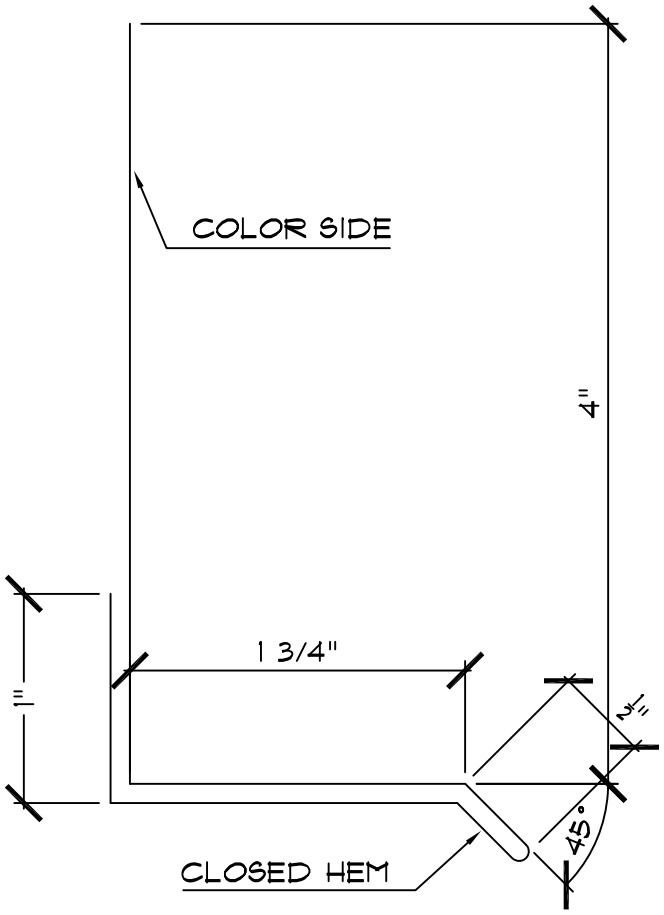

GAUGE:	STRETCH-OUT: 9 1/2"	PART #: DF027
COLOR:	# OF BREAKS: 6	PART NAME: DRIP
LENGTH: 10'-0"	QUANTITY:	

CUSTOMER:	DRAWN BY: BMG	AEP SPAN
JOB NAME:	DATE: 08/01/16	
AEPS ORDER #:	ACCEPTED BY:	
	DATE:	

Return to Menu

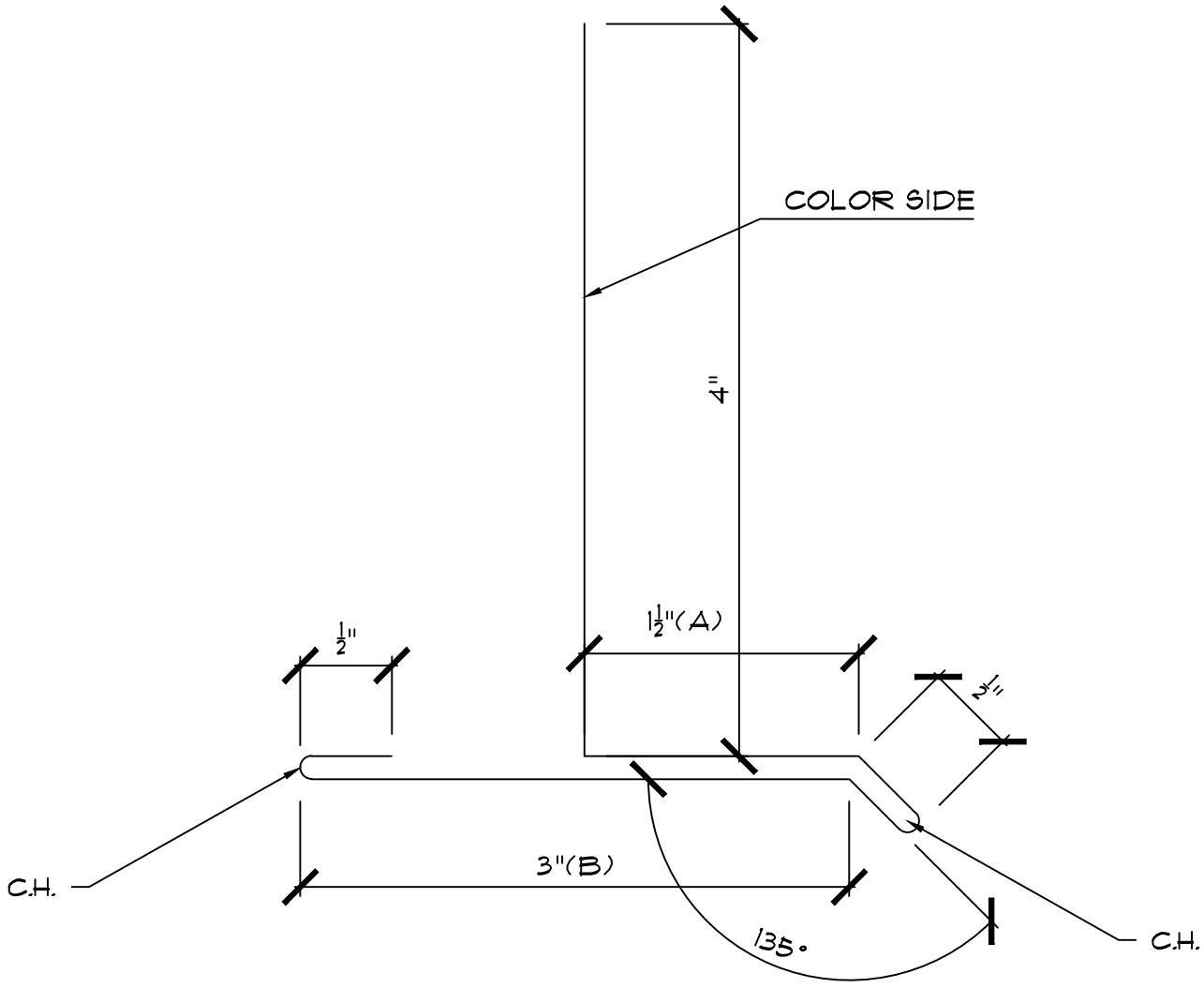

GAUGE:	STRETCH-OUT: 10"	PART #: DF012
COLOR:	# OF BREAKS: 7	PART NAME:
LENGTH: 10'-0"	QUANTITY:	DRIPFLASHING W/SOFFIT

CUSTOMER:	DRAWN BY:	AEP SPAN
JOB NAME:	DATE:	
AEPS ORDER #:	ACCEPTED BY:	
	DATE:	

Return to Menu

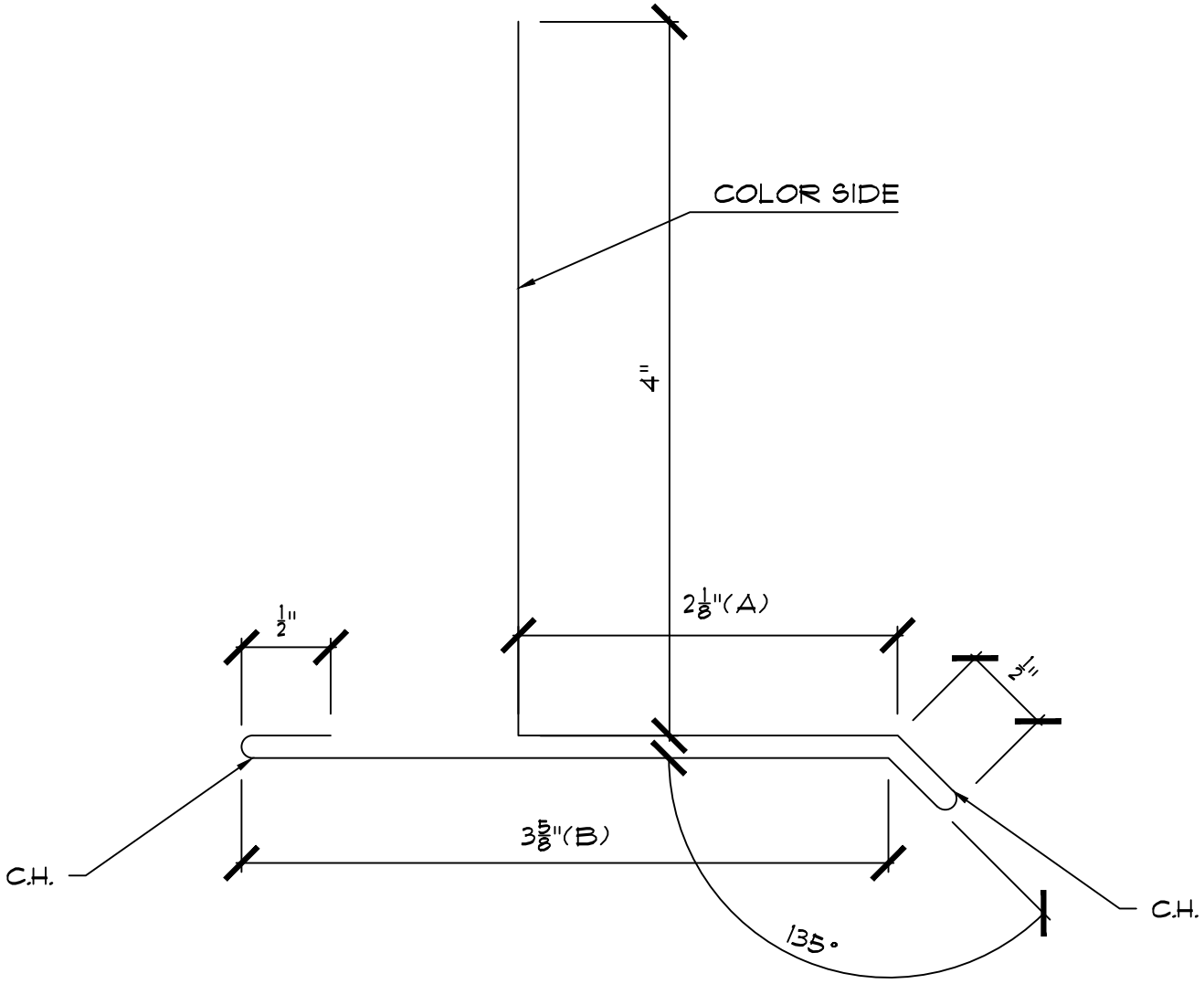

GAUGE:	STRETCH-OUT: 11 1/4"	PART #: DF013
COLOR:	# OF BREAKS: 7	PART NAME:
LENGTH: 10'-0"	QUANTITY:	DRIP FLASHING W/SOFFIT

CUSTOMER:	DRAWN BY:	AEP SPAN
JOB NAME:	DATE:	
AEPS ORDER #:	ACCEPTED BY:	
	DATE:	

Return to Menu

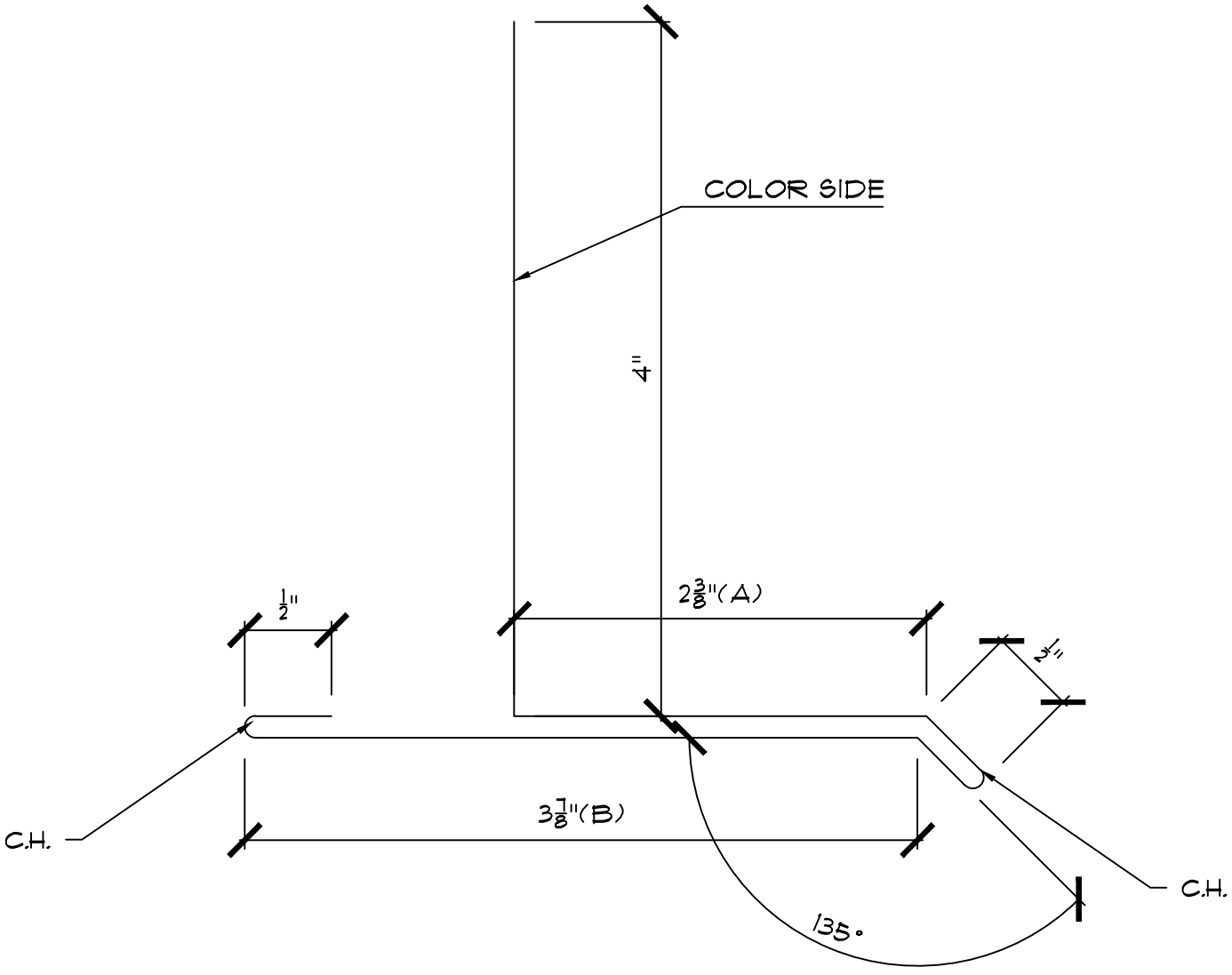

GAUGE:	STRETCH-OUT: 11 3/4"	PART #: DF014
COLOR:	# OF BREAKS: 7	PART NAME:
LENGTH: 10'-0"	QUANTITY:	DRIP FLASHING W/SOFFIT

CUSTOMER:	DRAWN BY:	AEP SPAN
JOB NAME:	DATE:	
AEPS ORDER #:	ACCEPTED BY:	
	DATE:	

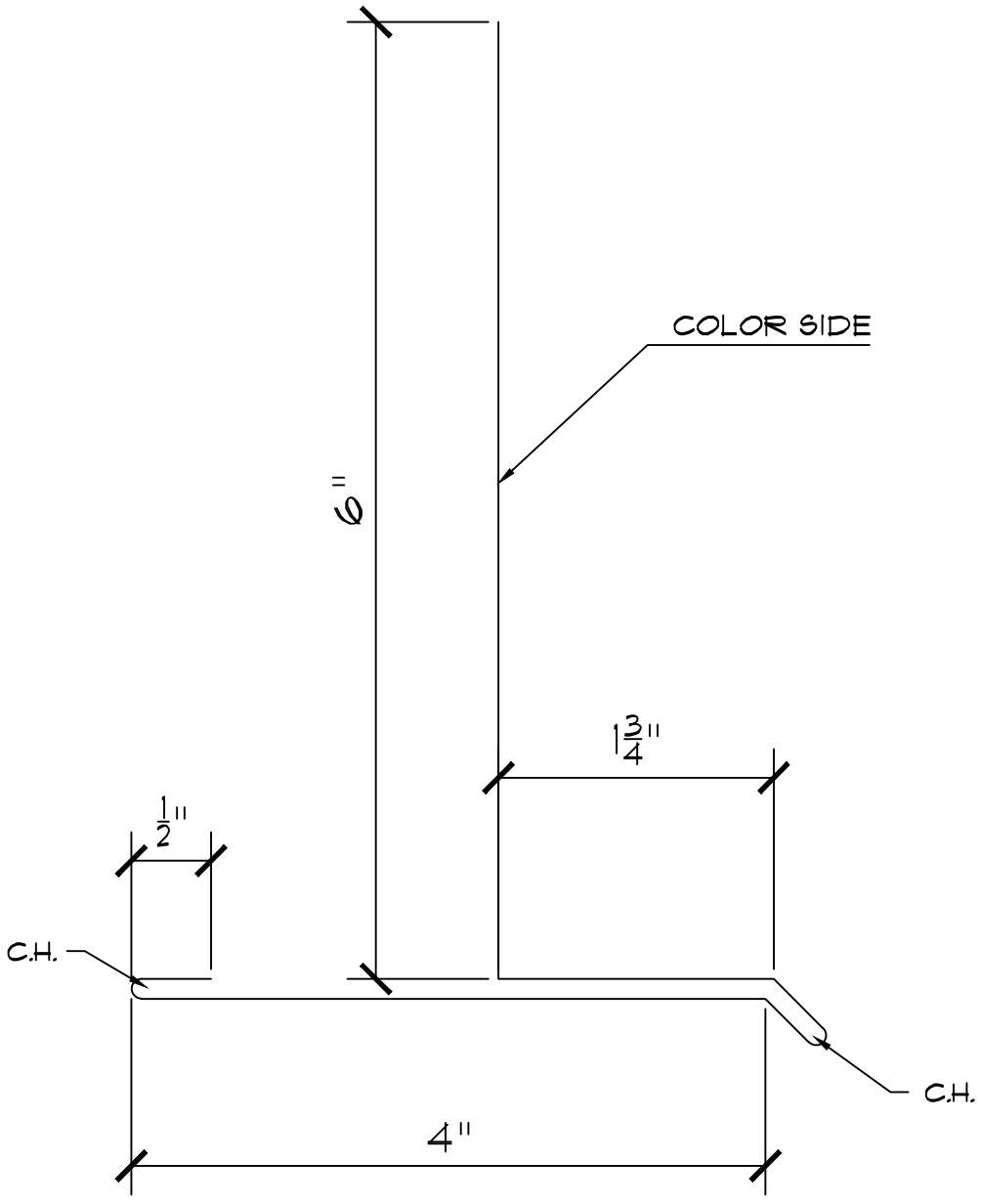

GAUGE:	STRETCH-OUT: 13 1/4"	PART #: DF017
COLOR:	# OF BREAKS: 7	PART NAME:
LENGTH: 10'-0"	QUANTITY:	DRIP FLASHING

CUSTOMER:	DRAWN BY:	AEP SPAN
JOB NAME:	DATE:	
AEPS ORDER #:	ACCEPTED BY:	
	DATE:	

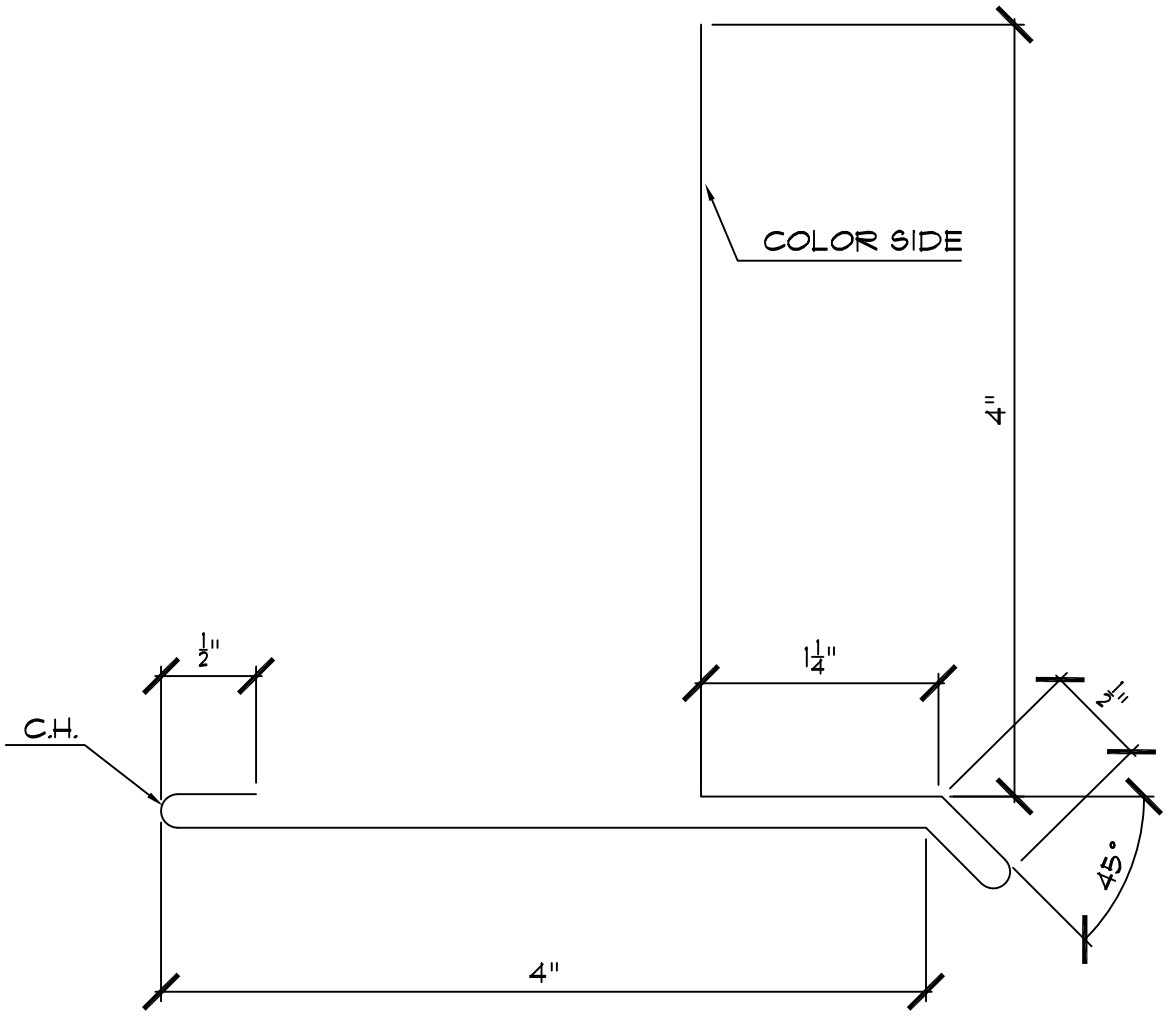

GAUGE:	STRETCH-OUT: 10 3/4"	PART #: DF019
COLOR:	# OF BREAKS: 7	PART NAME: DRIP
LENGTH: 10'-0"	QUANTITY:	

CUSTOMER:	DRAWN BY: BMG	AEP SPAN
JOB NAME:	DATE: 8/01/16	
AEPS ORDER #:	ACCEPTED BY:	
	DATE:	

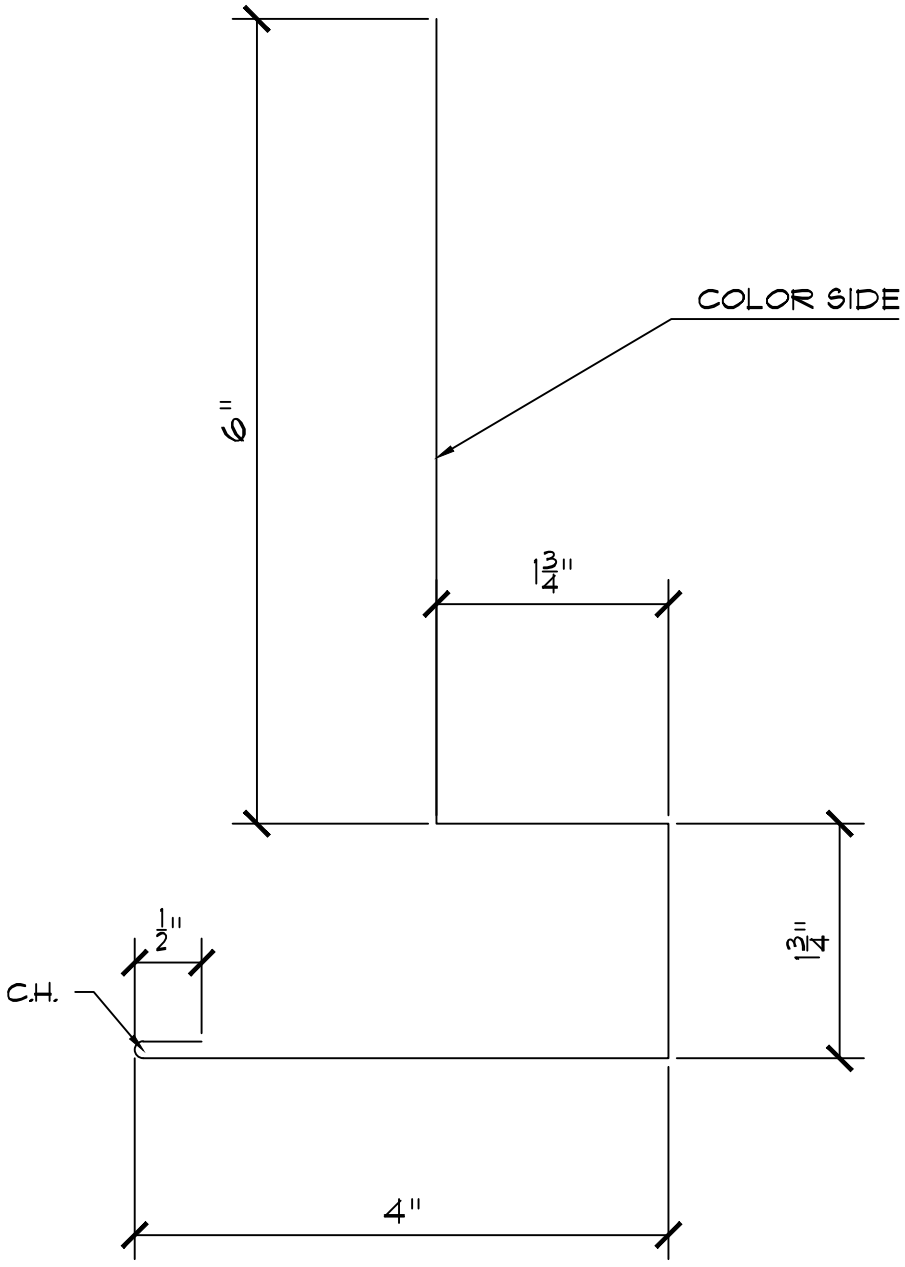

GAUGE:	STRETCH-OUT: 14"	PART #: DF016
COLOR:	# OF BREAKS: 5	PART NAME:
LENGTH: 10'-0"	QUANTITY:	DRIP FLASHING

CUSTOMER:	DRAWN BY:	AEP SPAN
JOB NAME:	DATE:	
AEPS ORDER #:	ACCEPTED BY:	
	DATE:	

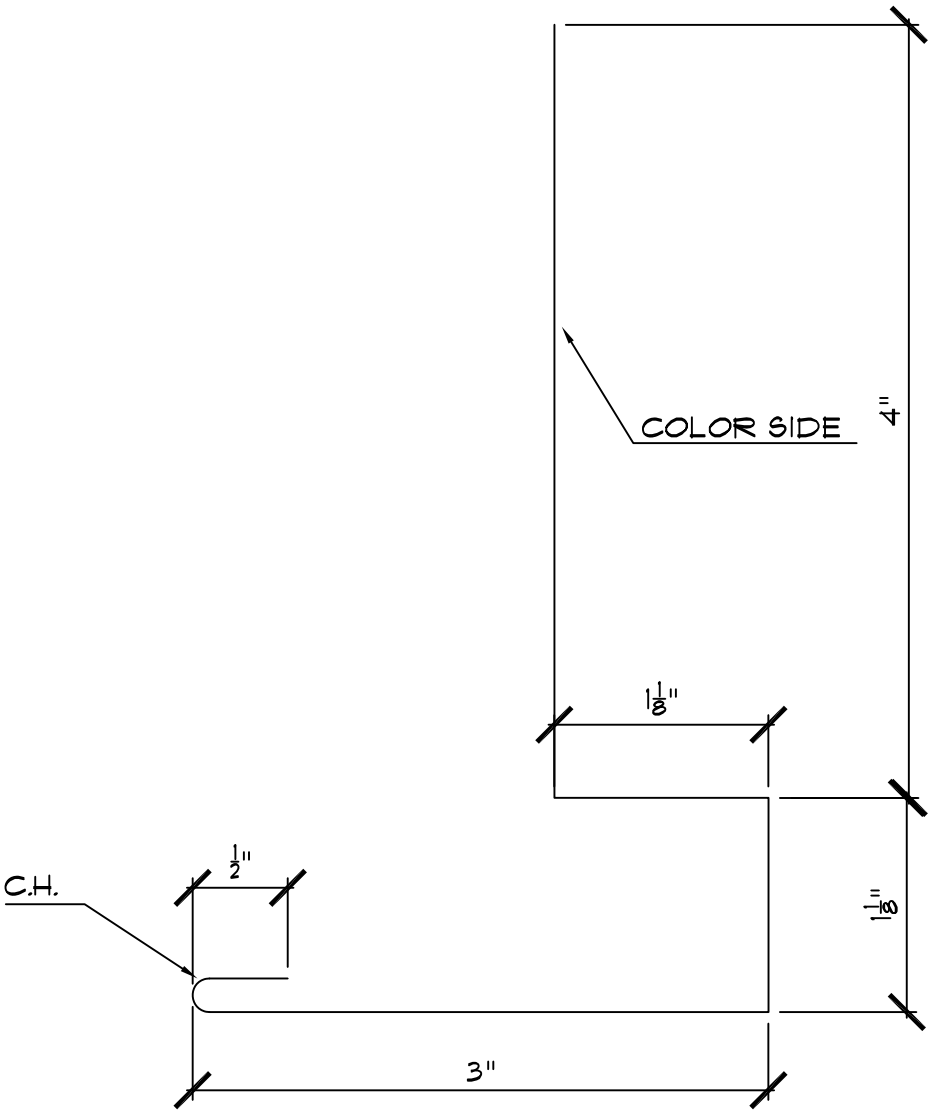

GAUGE:	STRETCH-OUT: 9 3/4"	PART #: DF018
COLOR:	# OF BREAKS: 5	PART NAME: DRIP
LENGTH: 10'-0"	QUANTITY:	

CUSTOMER:	DRAWN BY: BMG	AEP SPAN
JOB NAME:	DATE: 8/01/16	
AEPS ORDER #:	ACCEPTED BY:	
	DATE:	

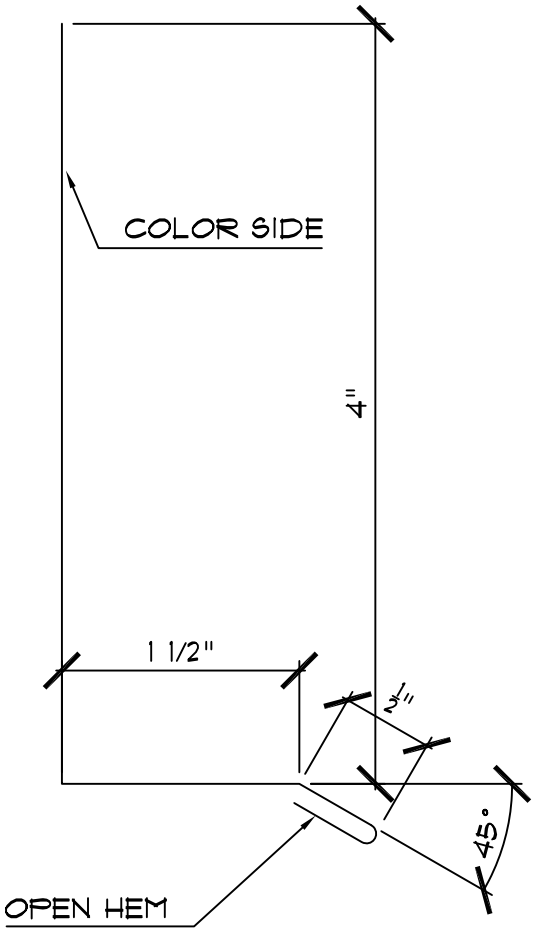

GAUGE:	STRETCH-OUT: 6 1/2"	PART #: DF028
COLOR:	# OF BREAKS: 4	PART NAME:
LENGTH: 10'-0"	QUANTITY:	DRIP @ SOFFIT

CUSTOMER:	DRAWN BY: BMG	AEP SPAN
JOB NAME:	DATE: 08/01/16	
AEPS ORDER #:	ACCEPTED BY:	
	DATE:	

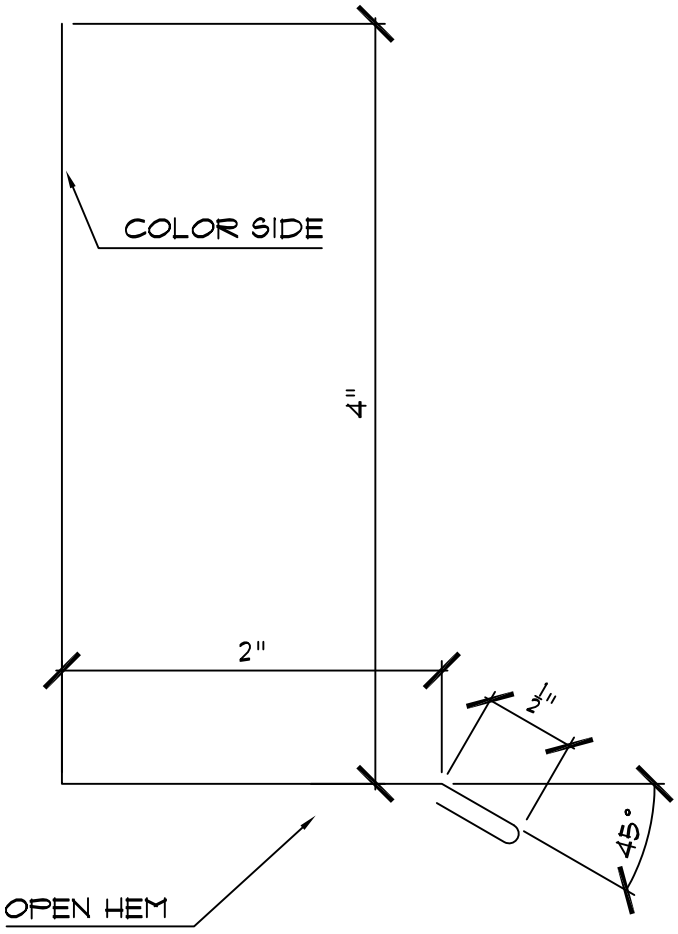

GAUGE:	STRETCH-OUT: 7"	PART #: DF029
COLOR:	# OF BREAKS: 4	PART NAME:
LENGTH: 10'-0"	QUANTITY:	DRIP @ SOFFIT

CUSTOMER:	DRAWN BY: BMG	AEP SPAN
JOB NAME:	DATE: 08/01/16	
AEPS ORDER #:	ACCEPTED BY:	
	DATE:	

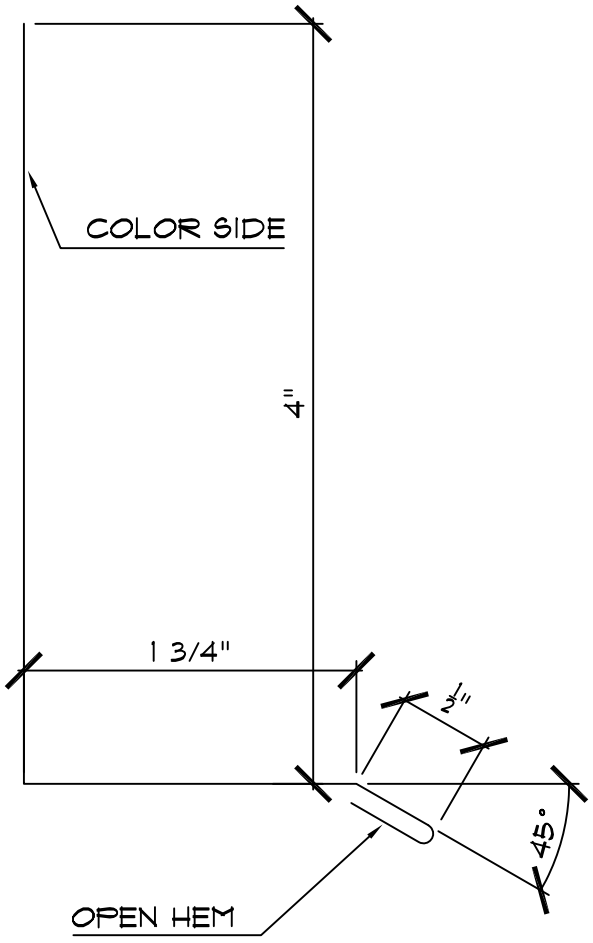

GAUGE:	STRETCH-OUT: 6 3/4"	PART #: DF030
COLOR:	# OF BREAKS: 4	PART NAME:
LENGTH: 10'-0"	QUANTITY:	DRIP @ SOFFIT

CUSTOMER:	DRAWN BY: BMG	AEP SPAN
JOB NAME:	DATE: 08/01/16	
AEPS ORDER #:	ACCEPTED BY:	
	DATE:	

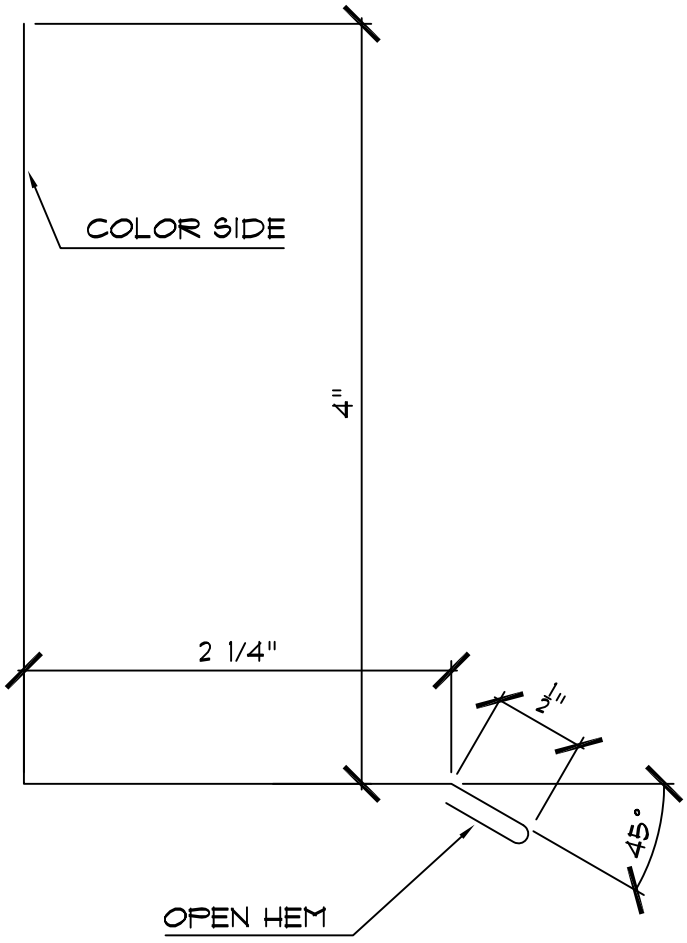

GAUGE:	STRETCH-OUT: 7 1/4"	PART #: DF031
COLOR:	# OF BREAKS: 4	PART NAME:
LENGTH: 10'-0"	QUANTITY:	DRIP @ SOFFIT

CUSTOMER:	DRAWN BY: BMG	AEP SPAN
JOB NAME:	DATE: 08/01/16	
AEPS ORDER #:	ACCEPTED BY:	
	DATE:	

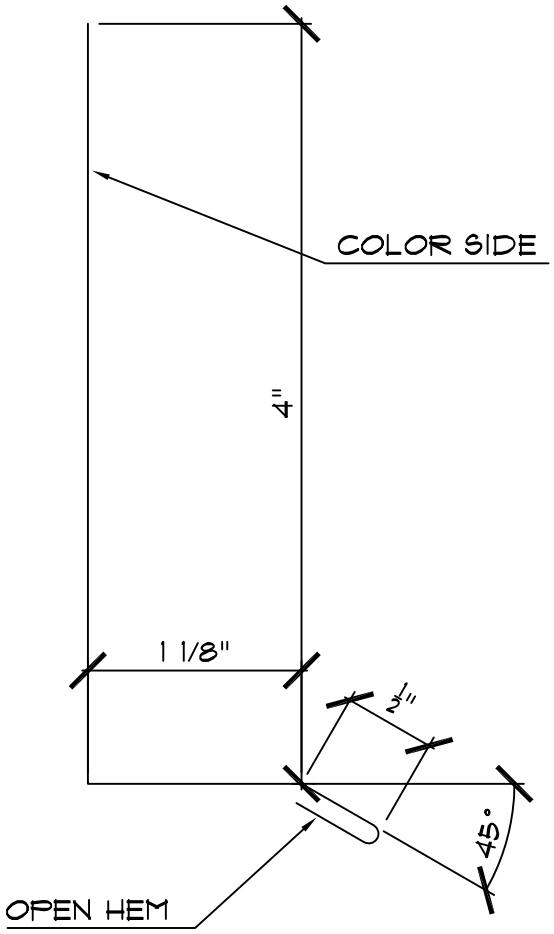

GAUGE:	STRETCH-OUT: 6 1/8"	PART #: DF032
COLOR:	# OF BREAKS: 4	PART NAME:
LENGTH: 10'-0"	QUANTITY:	DRIP @ SOFFIT

CUSTOMER:	DRAWN BY: BMG	AEP SPAN
JOB NAME:	DATE: 08/01/16	
AEPS ORDER #:	ACCEPTED BY:	
	DATE:	

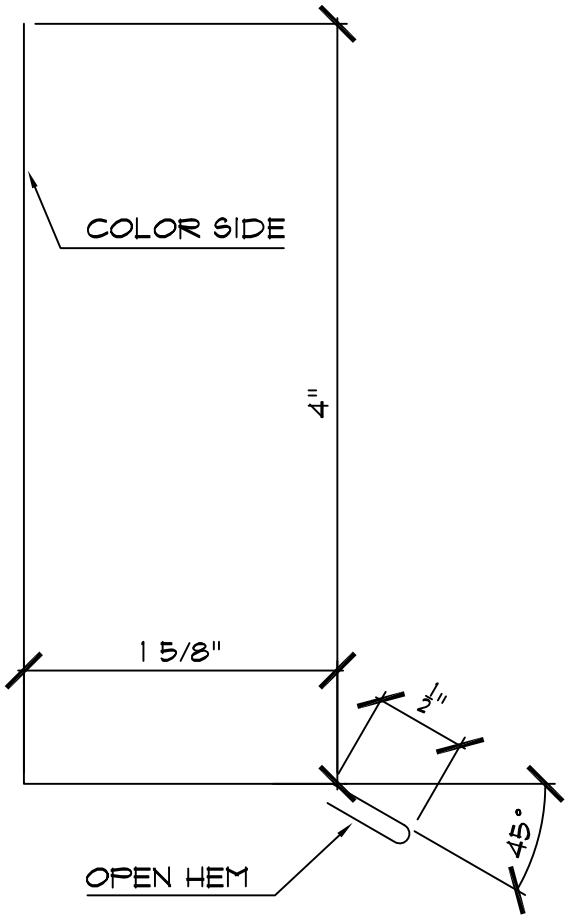

GAUGE:	STRETCH-OUT: 6 5/8"	PART #: DF033
COLOR:	# OF BREAKS: 4	PART NAME:
LENGTH: 10'-0"	QUANTITY:	DRIP @ SOFFIT

CUSTOMER:	DRAWN BY: BMG	AEP SPAN
JOB NAME:	DATE: 08/01/16	
AEPS ORDER #:	ACCEPTED BY:	
	DATE:	

Return to Menu

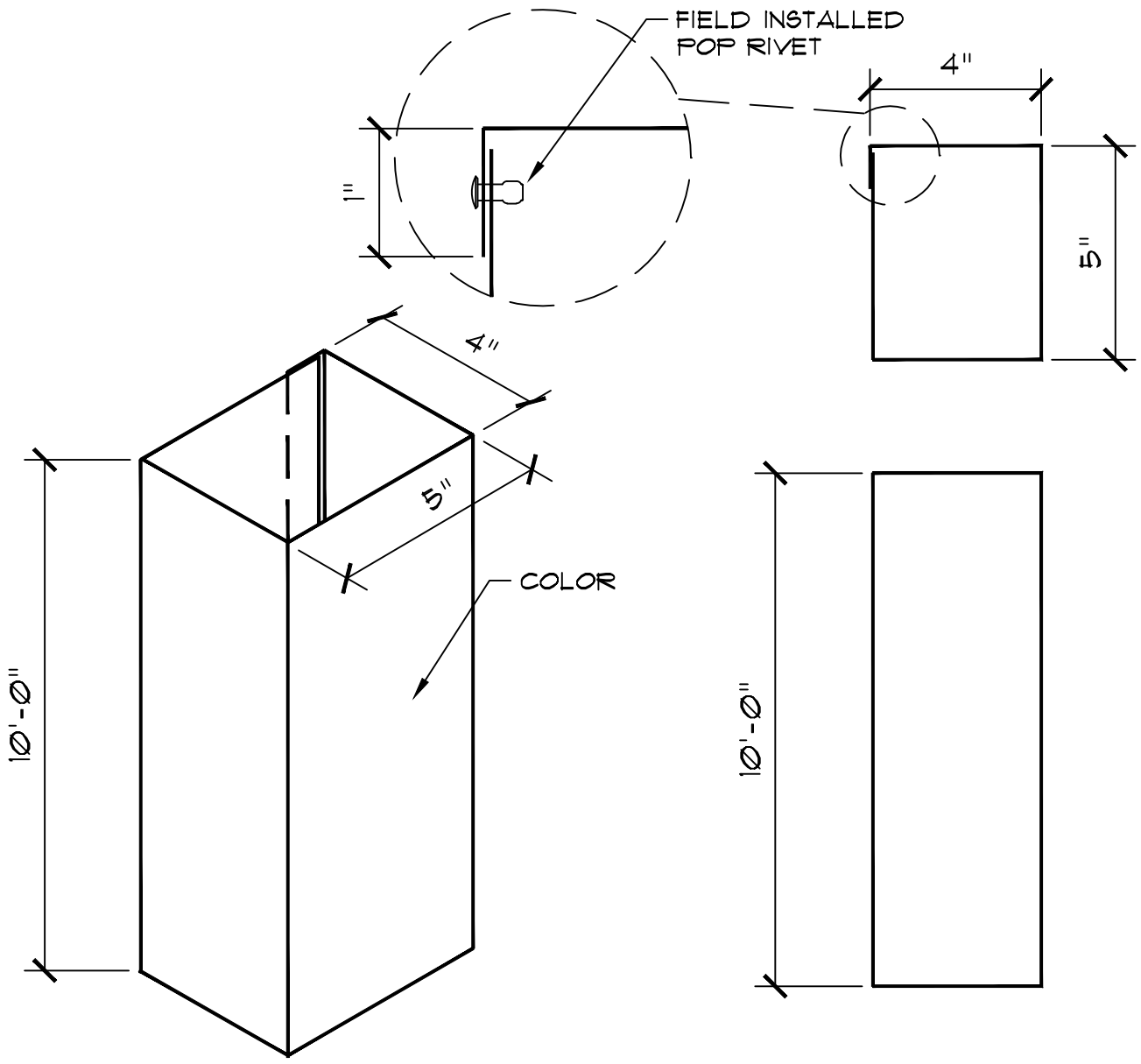

GAUGE:	STRETCH-OUT: 19"	PART #: DS020
COLOR:	# OF BREAKS: 4	PART NAME:
LENGTH: 10'-0"	QUANTITY:	LARGE DOWNSPOUT

CUSTOMER:	DRAWN BY:	AEP SPAN
JOB NAME:	DATE:	
AEPS ORDER #:	ACCEPTED BY:	
	DATE:	

Return to Menu

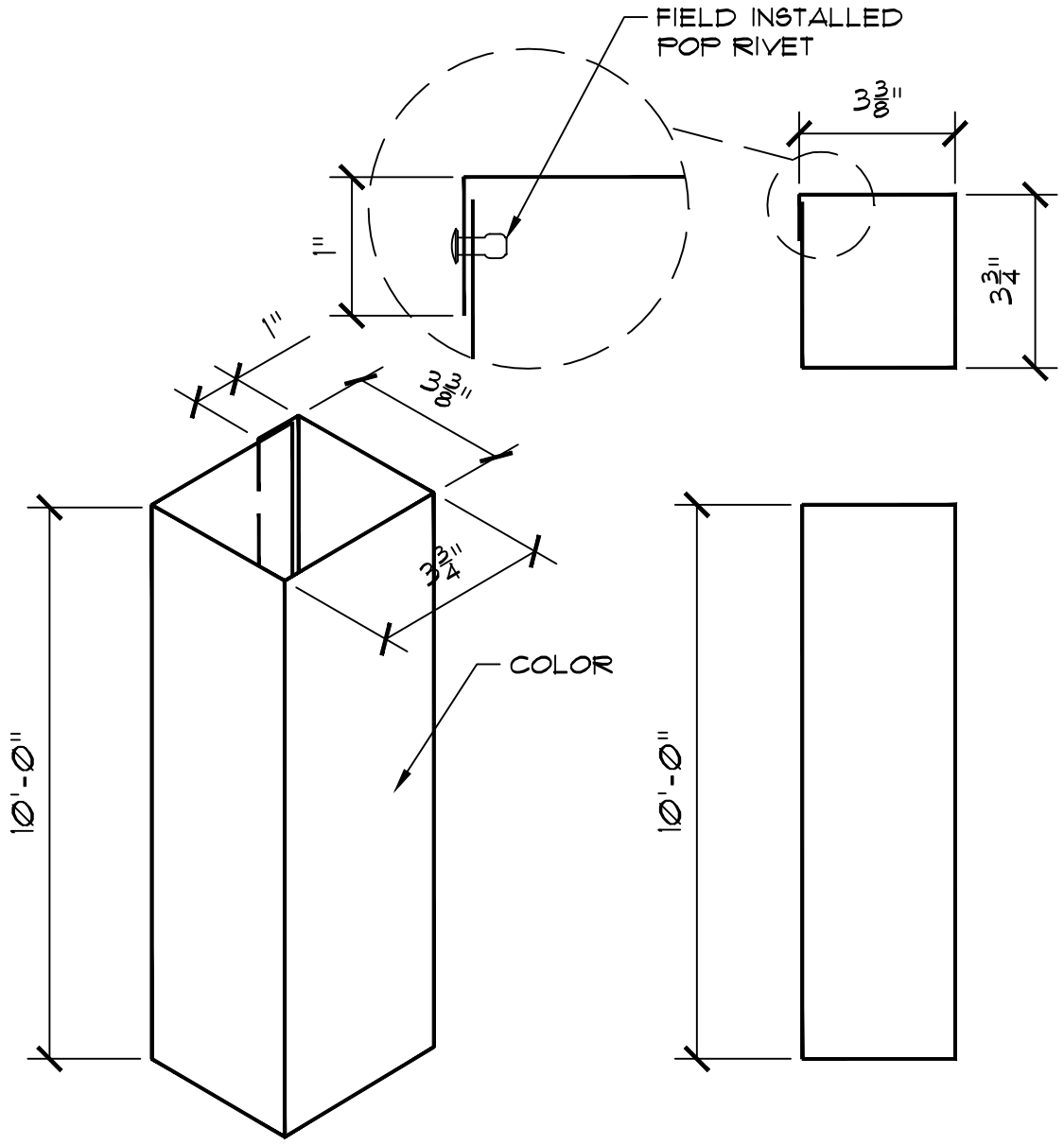

GAUGE:	STRETCH-OUT: 15"	PART #: DS022
COLOR:	# OF BREAKS: 4	PART NAME:
LENGTH: 10'-0"	QUANTITY:	SMALL DOWNSPOUT

CUSTOMER:	DRAWN BY:	AEP SPAN
JOB NAME:	DATE:	
AEPS ORDER #:	ACCEPTED BY:	
	DATE:	

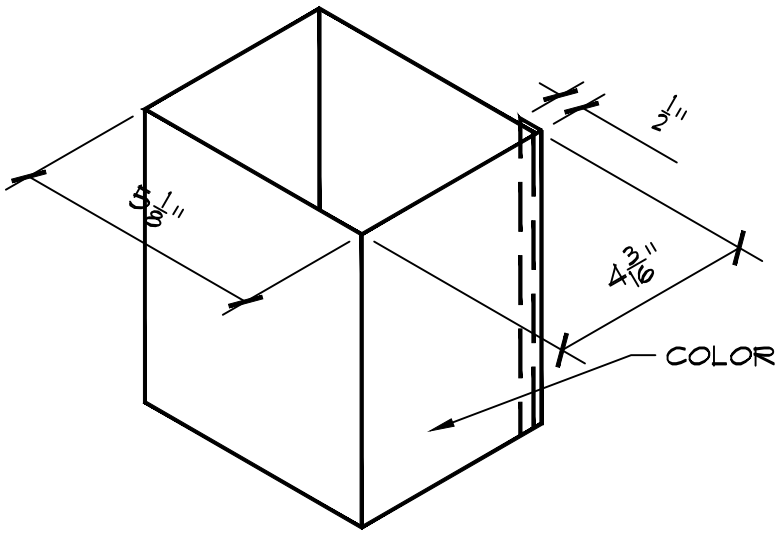

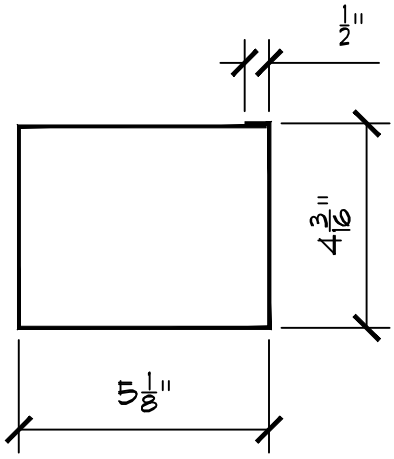

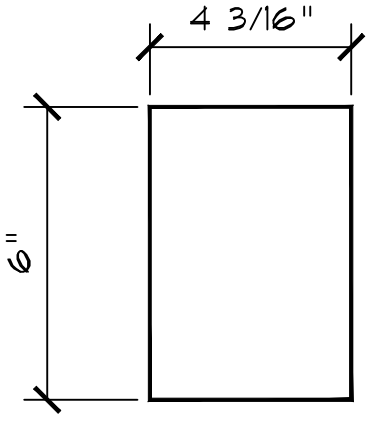

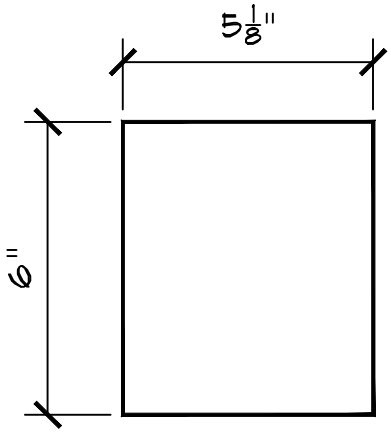

GAUGE:	STRETCH-OUT: 19"	PART #: DS024
COLOR:	# OF BREAKS: 4	PART NAME:
LENGTH: 6"	QUANTITY:	LARGE DOWNSPOUT SPLICE

CUSTOMER:	DRAWN BY:	AEP SPAN
JOB NAME:	DATE:	
AEPS ORDER #:	ACCEPTED BY:	
	DATE:	

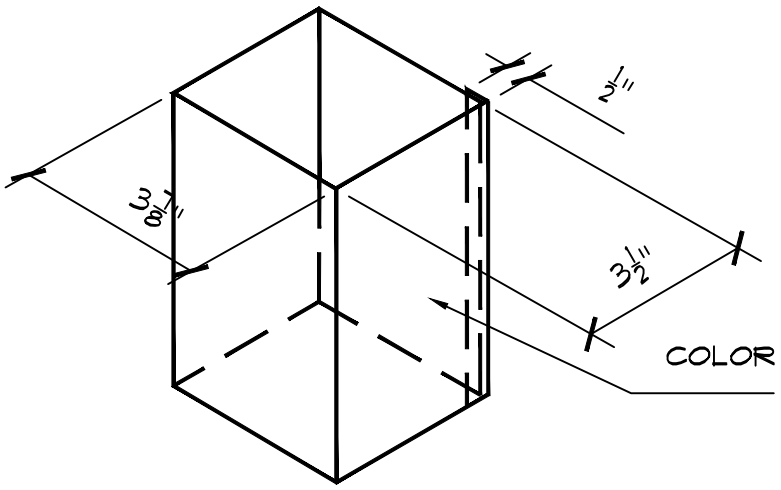

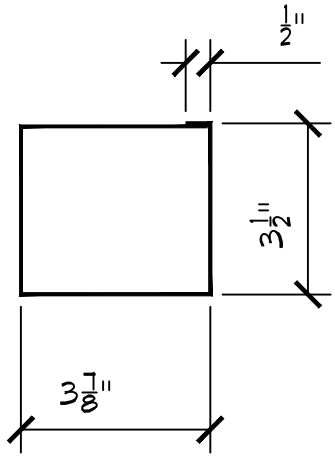

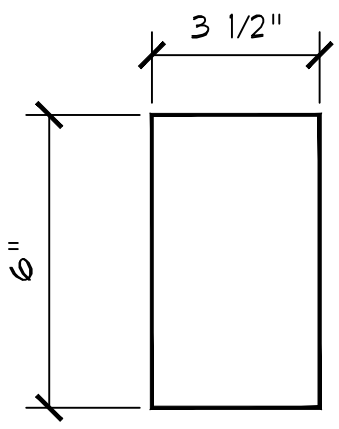

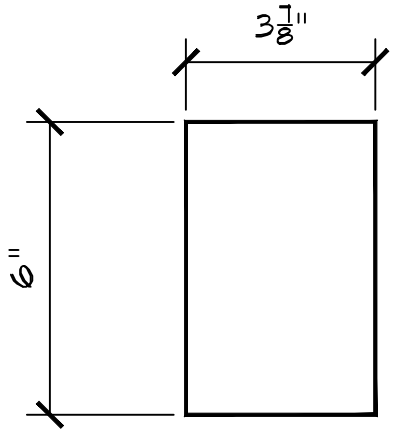

GAUGE:	STRETCH-OUT: 15 1/8"	PART #: DS025
COLOR:	# OF BREAKS: 4	PART NAME:
LENGTH: 6"	QUANTITY:	SMALL DOWNSPOUT SPLICE

CUSTOMER:	DRAWN BY:	AEP SPAN
JOB NAME:	DATE:	
AEPS ORDER #:	ACCEPTED BY:	
	DATE:	

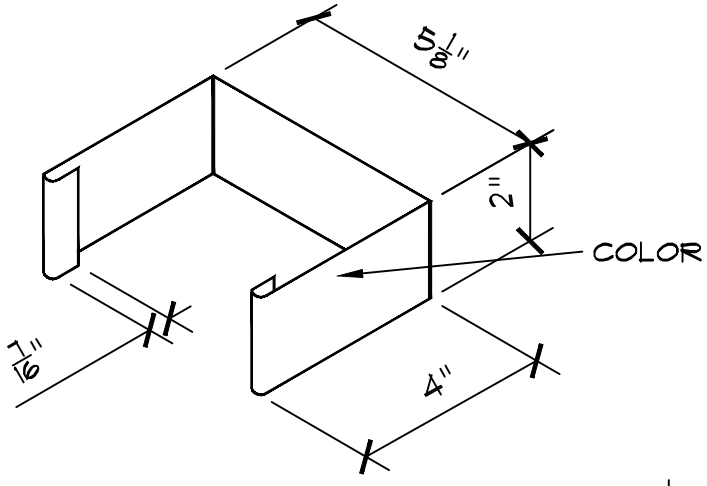

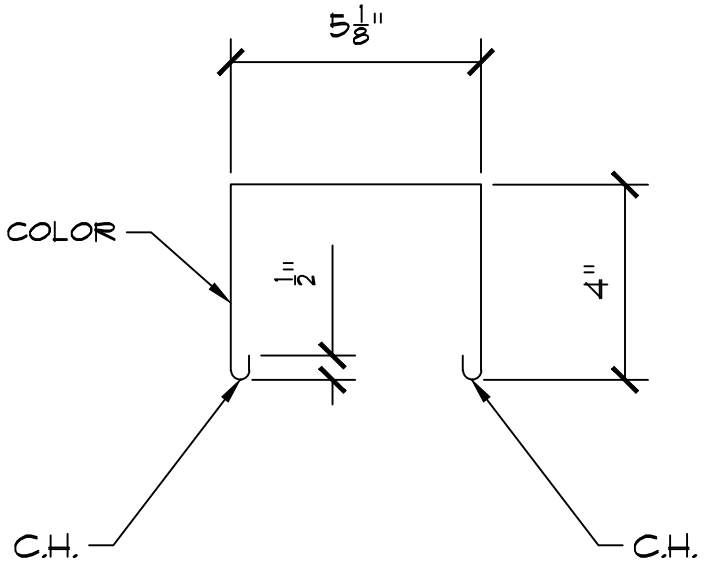

GAUGE:	STRETCH-OUT: 14 1/8"	PART #: DS026
COLOR:	# OF BREAKS: 6	PART NAME:
LENGTH: 2"	QUANTITY:	LARGE DOWNSPOUT STRAP

CUSTOMER:	DRAWN BY:	AEP SPAN
JOB NAME:	DATE:	
AEPS ORDER #:	ACCEPTED BY:	
	DATE:	

Return to Menu

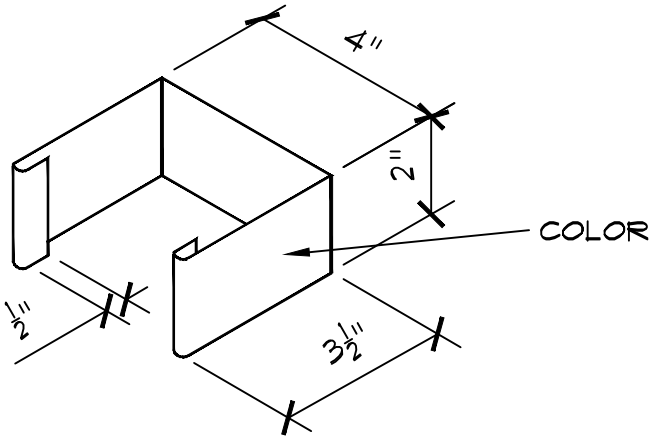

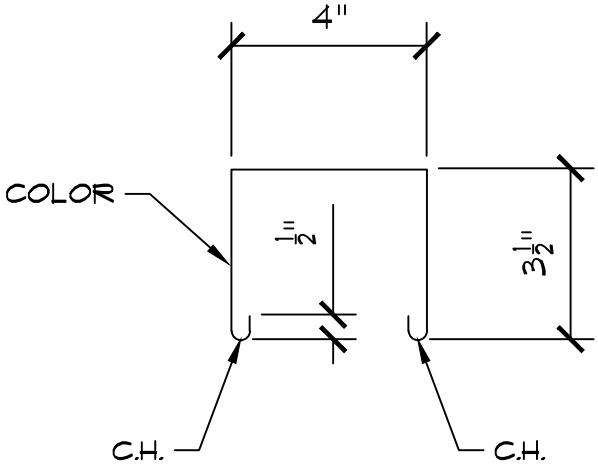

GAUGE:	STRETCH-OUT: 12"	PART #: DS027
COLOR:	# OF BREAKS: 6	PART NAME:
LENGTH: 2"	QUANTITY:	SMALL DOWNSPOUT STRAP

CUSTOMER:	DRAWN BY:	AEP SPAN
JOB NAME:	DATE:	
AEPS ORDER #:	ACCEPTED BY:	
	DATE:	

Return to Menu

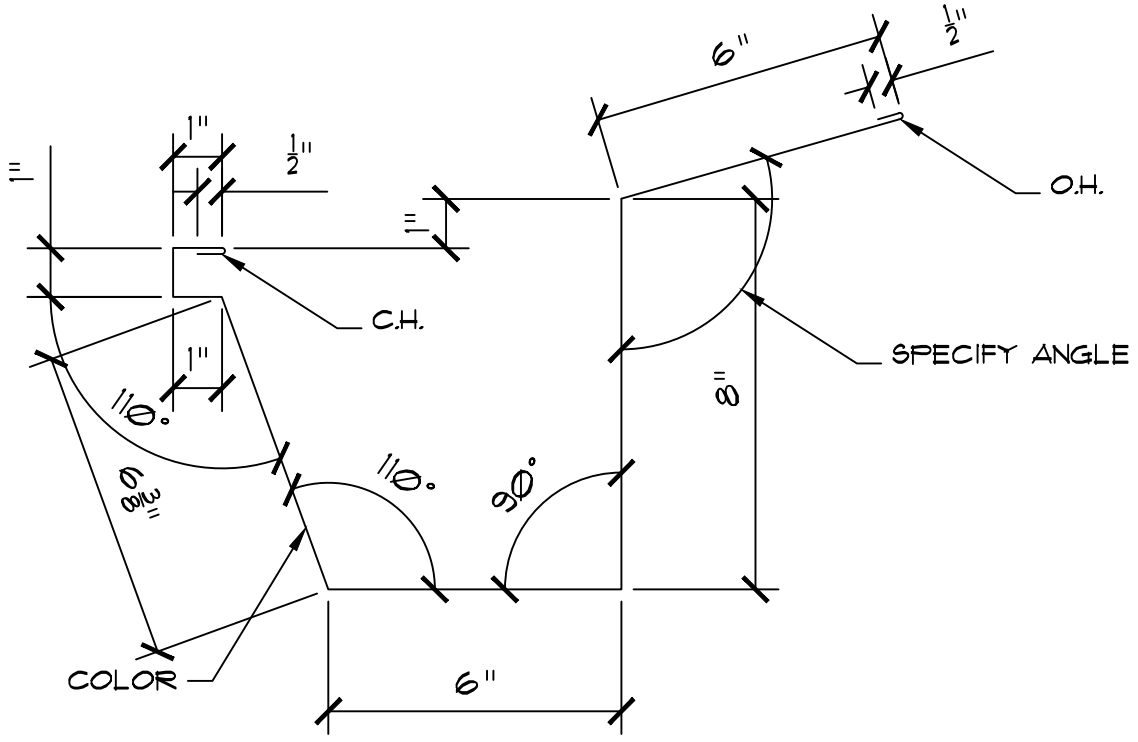

GAUGE:	STRETCH–OUT: 30 3/8"	PART #: EG029
COLOR:	# OF BREAKS: 10	PART NAME:
LENGTH: 10'-0"	QUANTITY:	LARGE BOX GUTTER

CUSTOMER:	DRAWN BY:	AEP SPAN
JOB NAME:	DATE:	
AEPS ORDER #:	ACCEPTED BY:	
	DATE:	

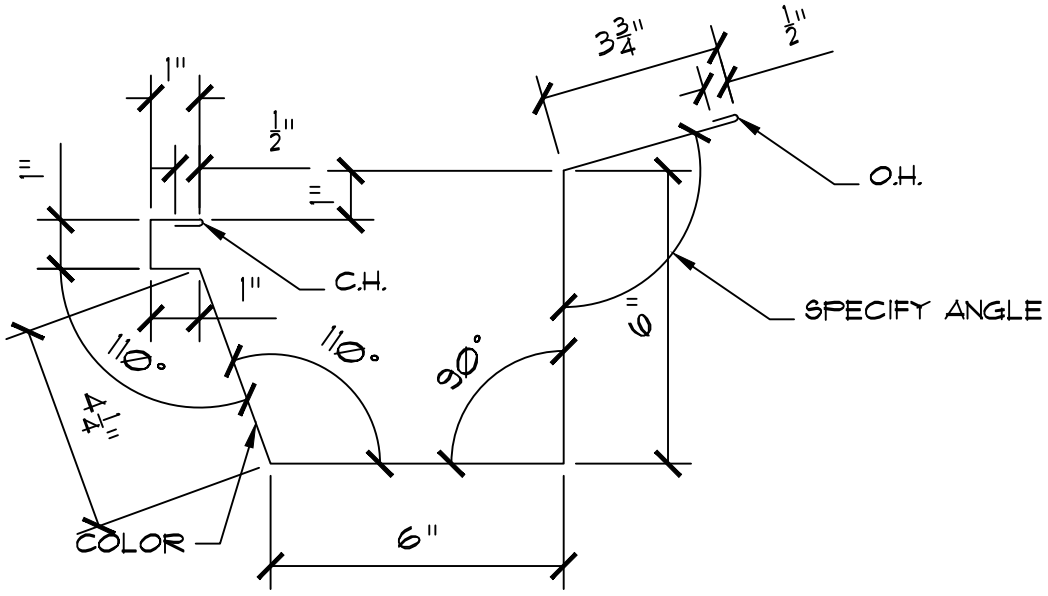

GAUGE:	STRETCH-OUT: 24"	PART #: EG031
COLOR:	# OF BREAKS: 10	PART NAME:
LENGTH: 10'-0"	QUANTITY:	SMALL BOX GUTTER

CUSTOMER:	DRAWN BY:	AEP SPAN
JOB NAME:	DATE:	
AEPS ORDER #:	ACCEPTED BY:	
	DATE:	

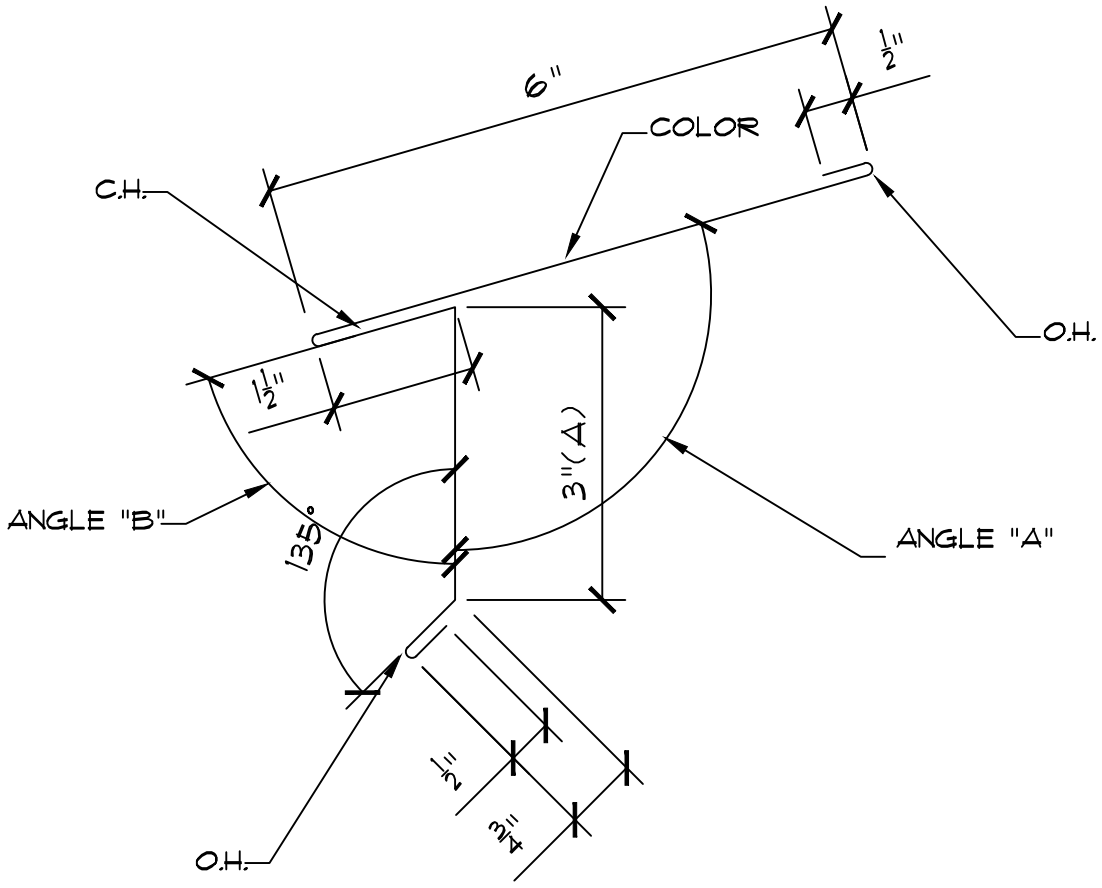

GAUGE:	STRETCH-OUT: 12 1/4"	PART #: ET033
COLOR:	# OF BREAKS: 8	PART NAME:
LENGTH: 10'-0"	QUANTITY:	EAVE TRIM

CUSTOMER:	DRAWN BY:	AEP SPAN
JOB NAME:	DATE:	
AEPS ORDER #:	ACCEPTED BY:	
	DATE:	

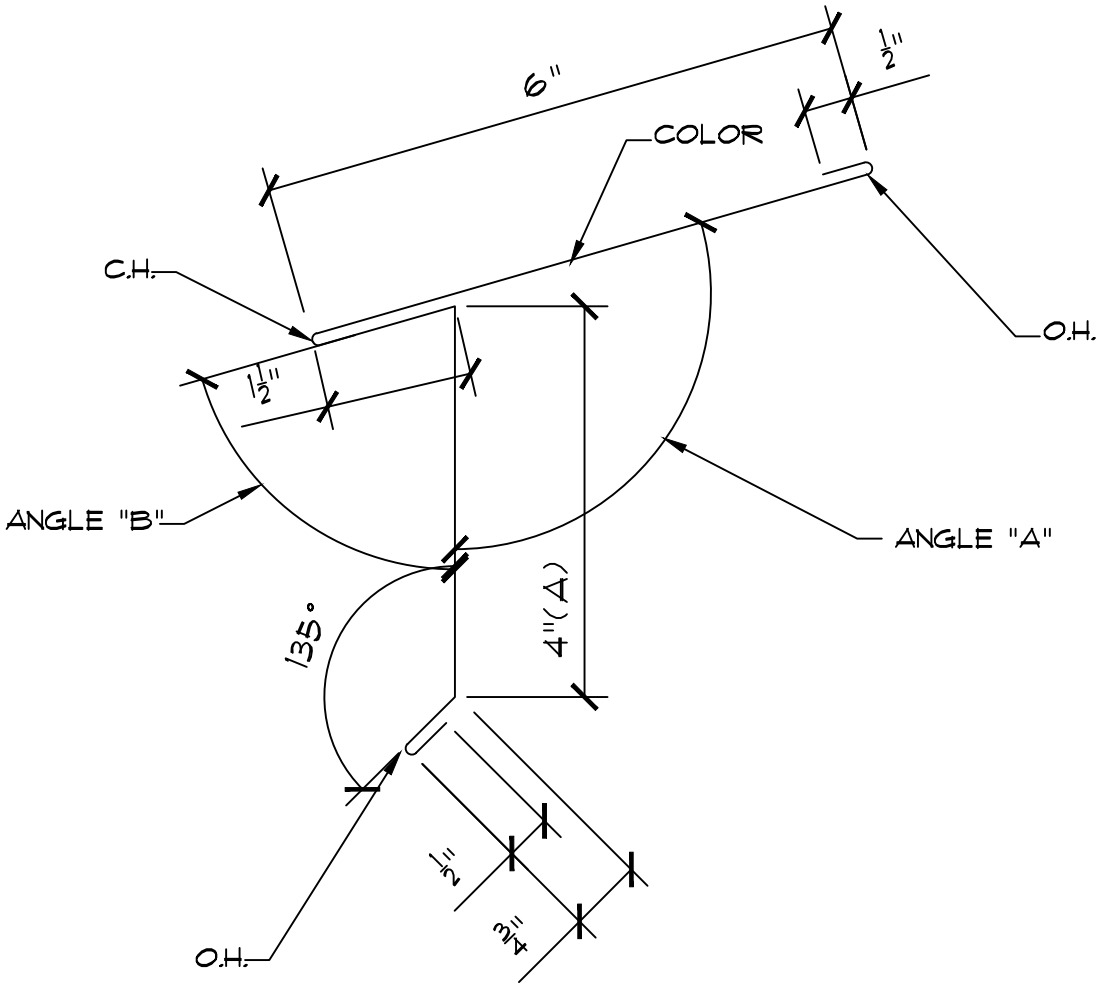

GAUGE:	STRETCH-OUT: 13 1/4"	PART #: ET035
COLOR:	# OF BREAKS: 8	PART NAME:
LENGTH: 10'-0"	QUANTITY:	EAVE TRIM

CUSTOMER:	DRAWN BY:	AEP SPAN
JOB NAME:	DATE:	
AEPS ORDER #:	ACCEPTED BY:	
	DATE:	

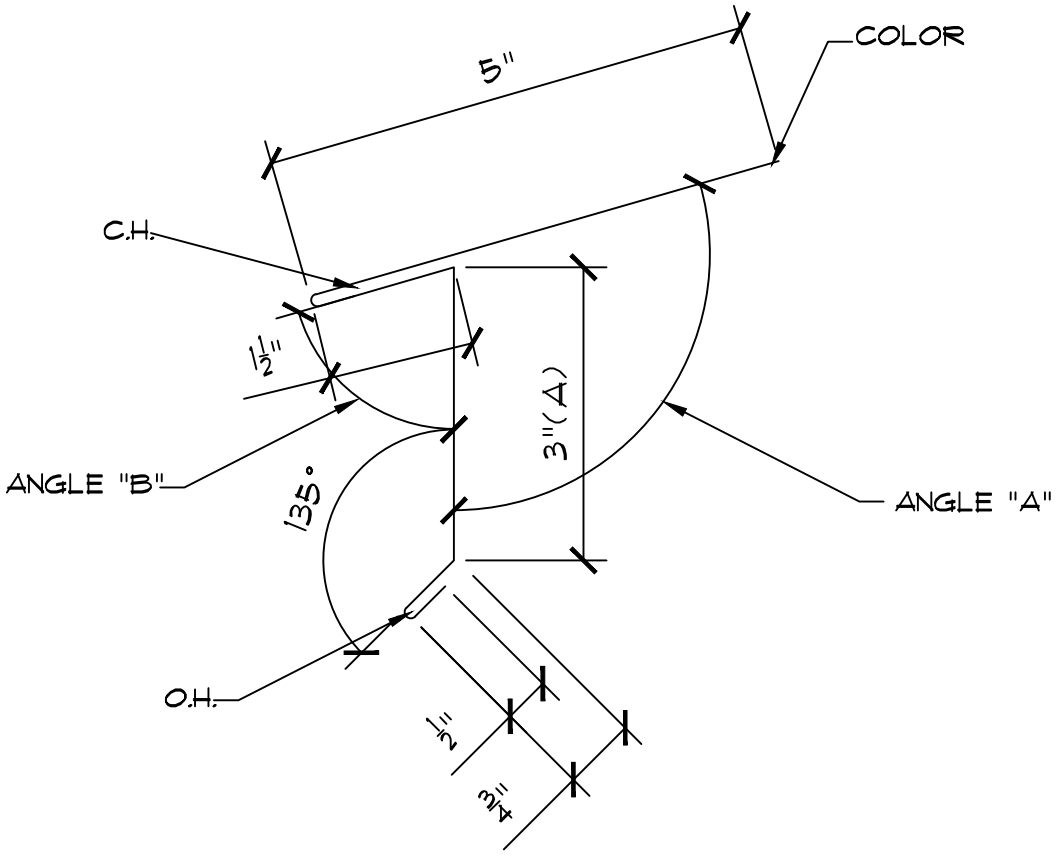

GAUGE:	STRETCH-OUT: 10 3/4"	PART #: ET037
COLOR:	# OF BREAKS: 6	PART NAME: EAVE TRIM
LENGTH: 10'-0"	QUANTITY:	

CUSTOMER:	DRAWN BY:	AEP SPAN
JOB NAME:	DATE:	
AEPS ORDER #:	ACCEPTED BY:	
	DATE:	

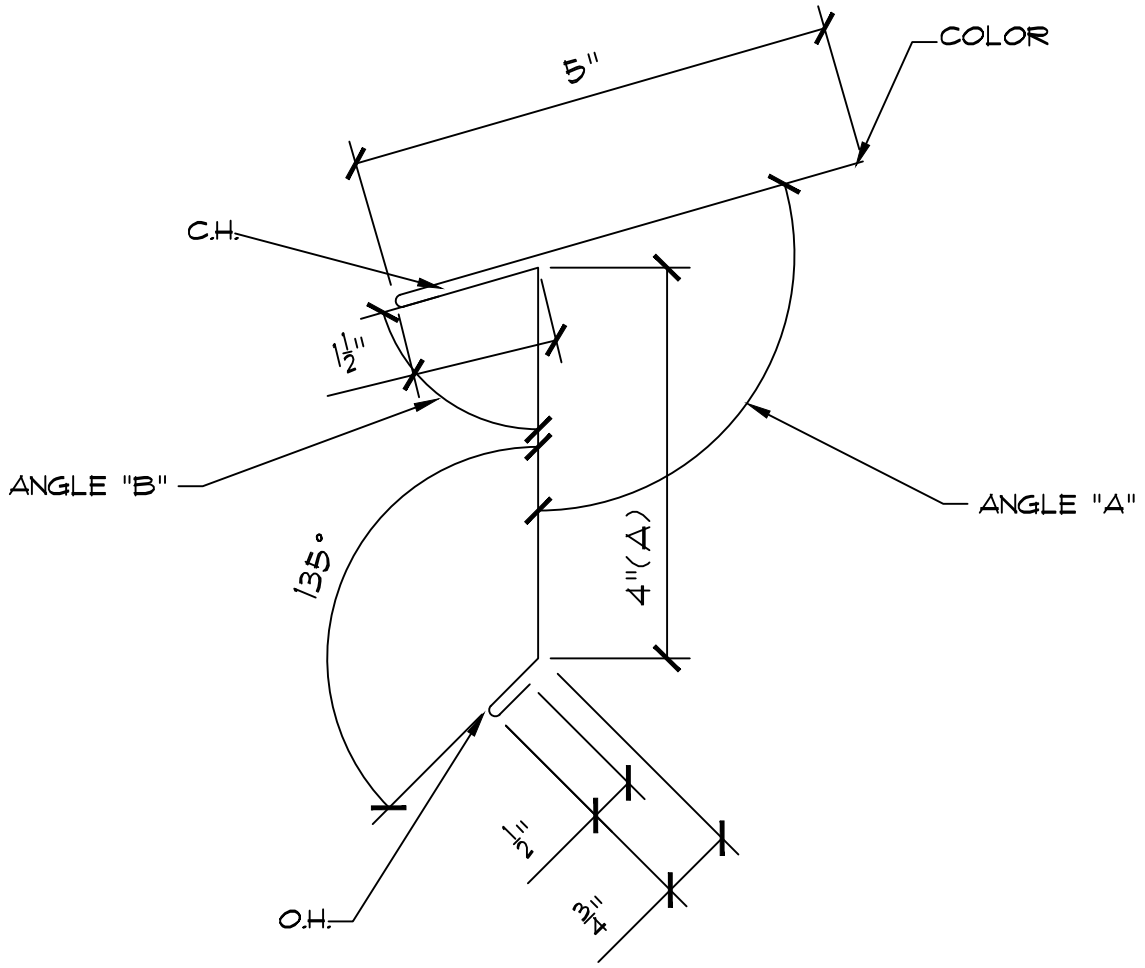

GAUGE:	STRETCH-OUT: 11 3/4"	PART #: ET039
COLOR:	# OF BREAKS: 6	PART NAME:
LENGTH: 10'-0"	QUANTITY:	EAVE TRIM

CUSTOMER:	DRAWN BY:	AEP SPAN
JOB NAME:	DATE:	
AEPS ORDER #:	ACCEPTED BY:	
	DATE:	

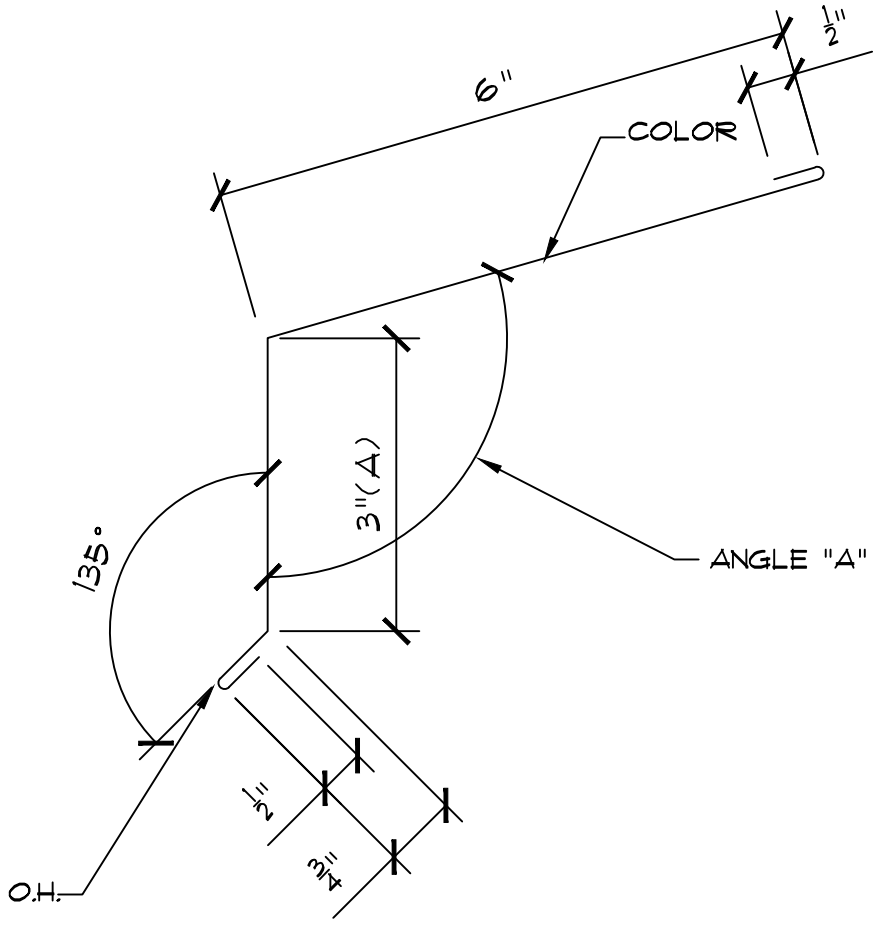

GAUGE:	STRETCH-OUT: 10 3/4"	PART #: ET041
COLOR:	# OF BREAKS: 6	PART NAME: EAVE TRIM
LENGTH: 10'-0"	QUANTITY:	

CUSTOMER:	DRAWN BY:	AEP SPAN
JOB NAME:	DATE:	
AEPS ORDER #:	ACCEPTED BY:	
	DATE:	

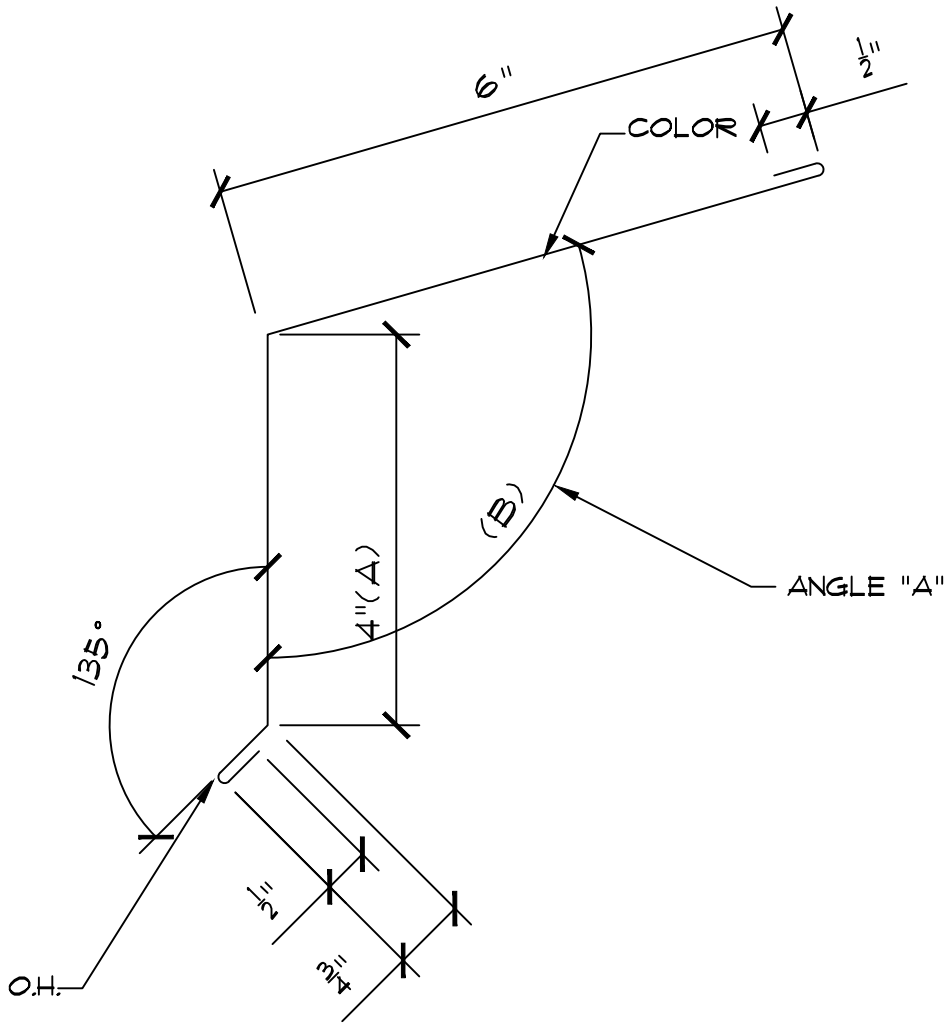

GAUGE:	STRETCH-OUT: 11 3/4"	PART #: ET043
COLOR:	# OF BREAKS: 6	PART NAME:
LENGTH: 10'-0"	QUANTITY:	EAVE TRIM

CUSTOMER:	DRAWN BY:	AEP SPAN
JOB NAME:	DATE:	
AEPS ORDER #:	ACCEPTED BY:	
	DATE:	

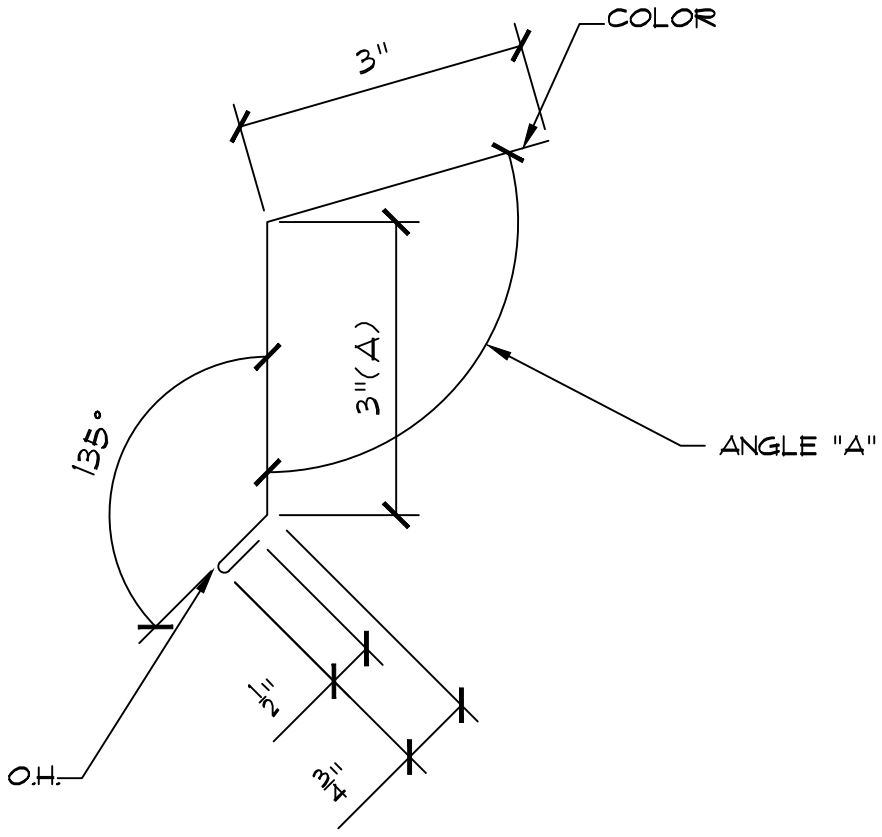

GAUGE:	STRETCH-OUT: 7 1/4"	PART #: ET045
COLOR:	# OF BREAKS: 4	PART NAME: EAVE TRIM
LENGTH: 10'-0"	QUANTITY:	

CUSTOMER:	DRAWN BY:	AEP SPAN
JOB NAME:	DATE:	
AEPS ORDER #:	ACCEPTED BY:	
	DATE:	

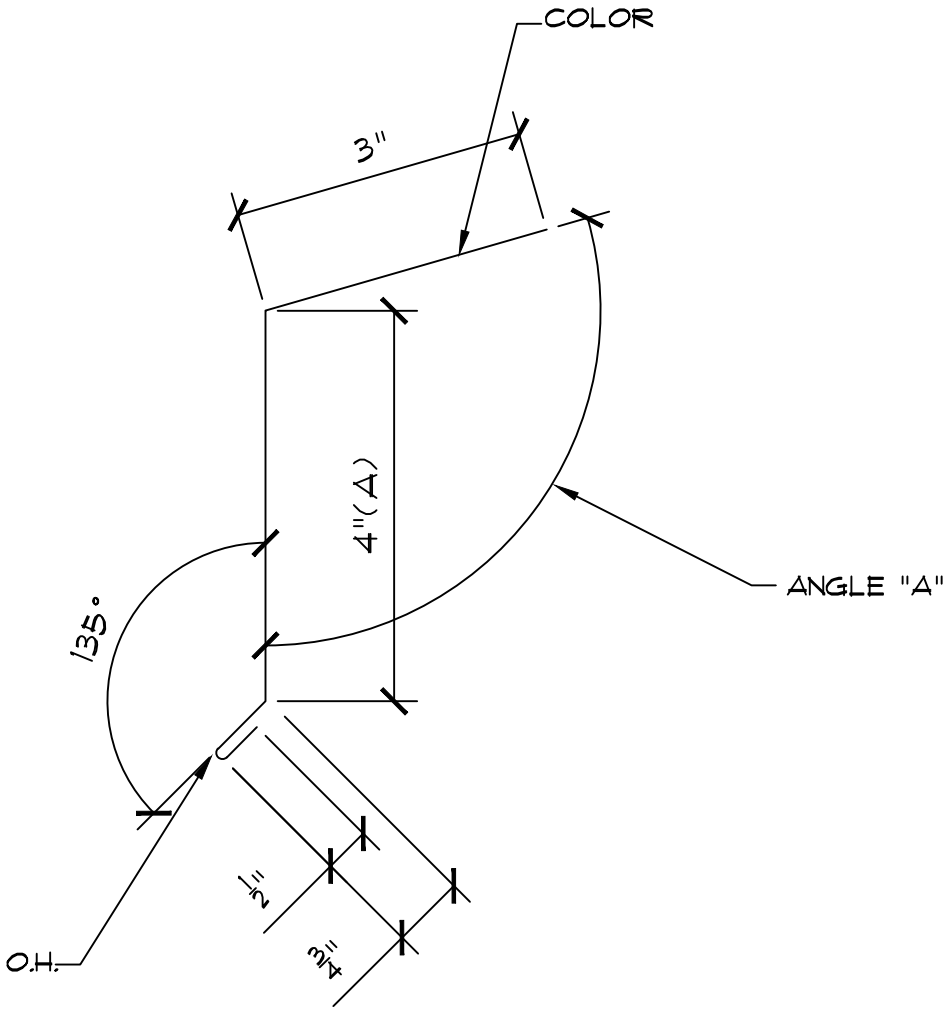

GAUGE:	STRETCH-OUT: 8 1/4"	PART #: ET047
COLOR:	# OF BREAKS: 4	PART NAME:
LENGTH: 10'-0"	QUANTITY:	EAVE TRIM

CUSTOMER:	DRAWN BY:	AEP SPAN
JOB NAME:	DATE:	
AEPS ORDER #:	ACCEPTED BY:	
	DATE:	

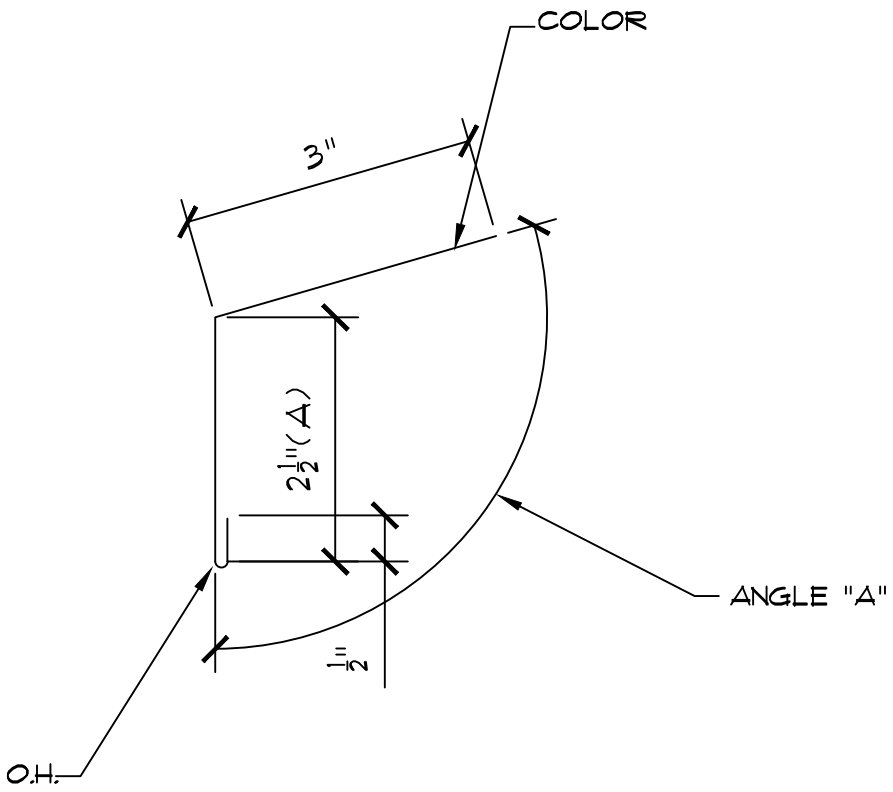

GAUGE:	STRETCH-OUT: 6"	PART #: ET049
COLOR:	# OF BREAKS: 3	PART NAME:
LENGTH: 10'-0"	QUANTITY:	EAVE TRIM

CUSTOMER:	DRAWN BY:	AEP SPAN
JOB NAME:	DATE:	
AEPS ORDER #:	ACCEPTED BY:	
	DATE:	

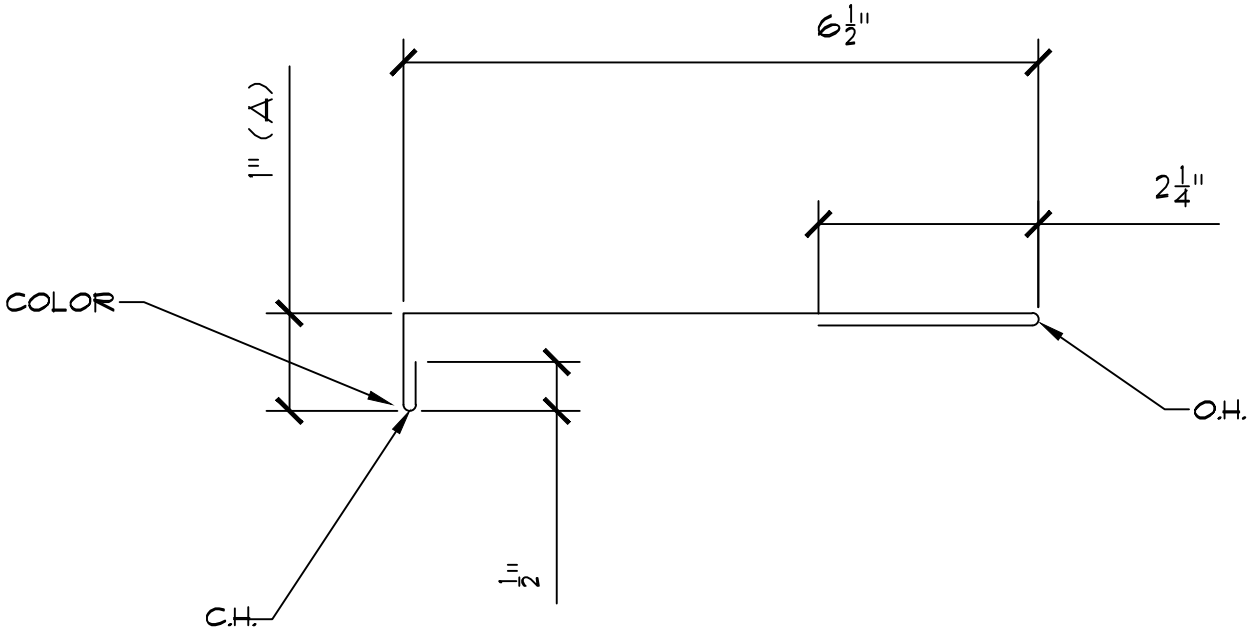

GAUGE:	STRETCH-OUT: 10 1/4"	PART #: EX053
COLOR:	# OF BREAKS: 5	PART NAME:
LENGTH: 10'-0"	QUANTITY:	EXPANSION TRIM

CUSTOMER:	DRAWN BY:	AEP SPAN
JOB NAME:	DATE:	
AEPS ORDER #:	ACCEPTED BY:	
	DATE:	

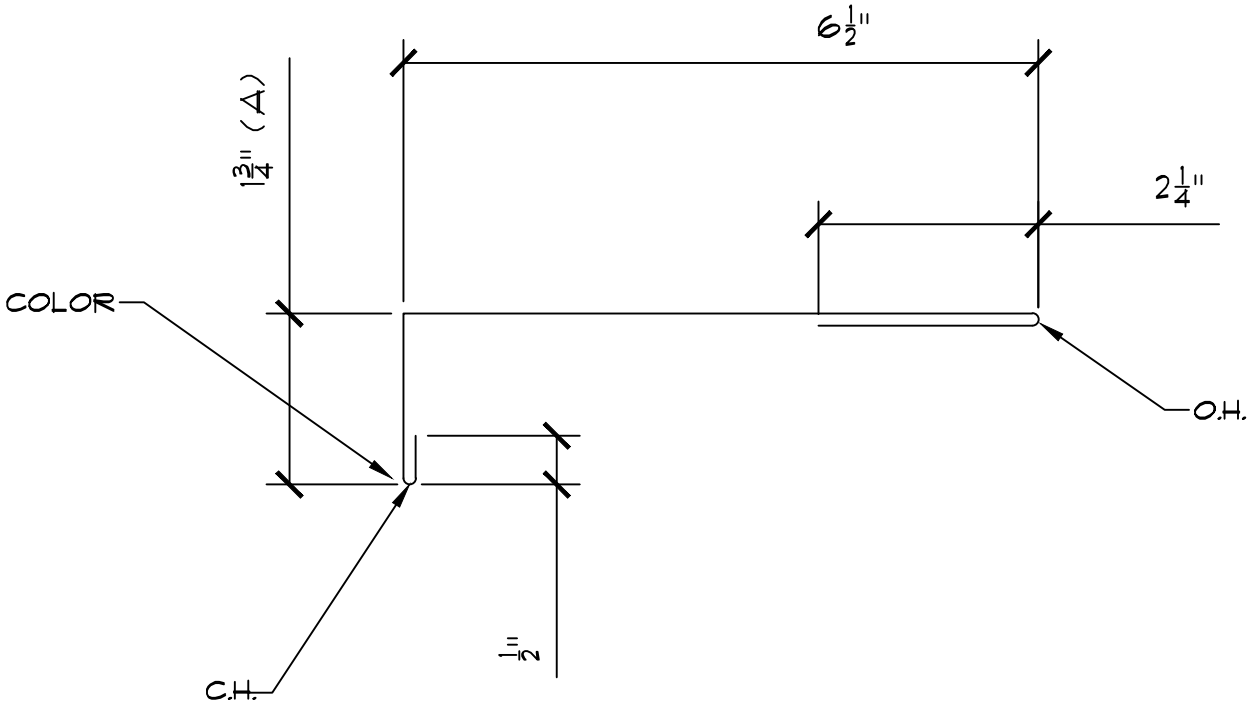

GAUGE:	STRETCH-OUT: 11"	PART #: EX055
COLOR:	# OF BREAKS: 5	PART NAME: EXPANSION TRIM
LENGTH: 10'-0"	QUANTITY:	

CUSTOMER:	DRAWN BY:	AEP SPAN
JOB NAME:	DATE:	
AEPS ORDER #:	ACCEPTED BY:	
	DATE:	

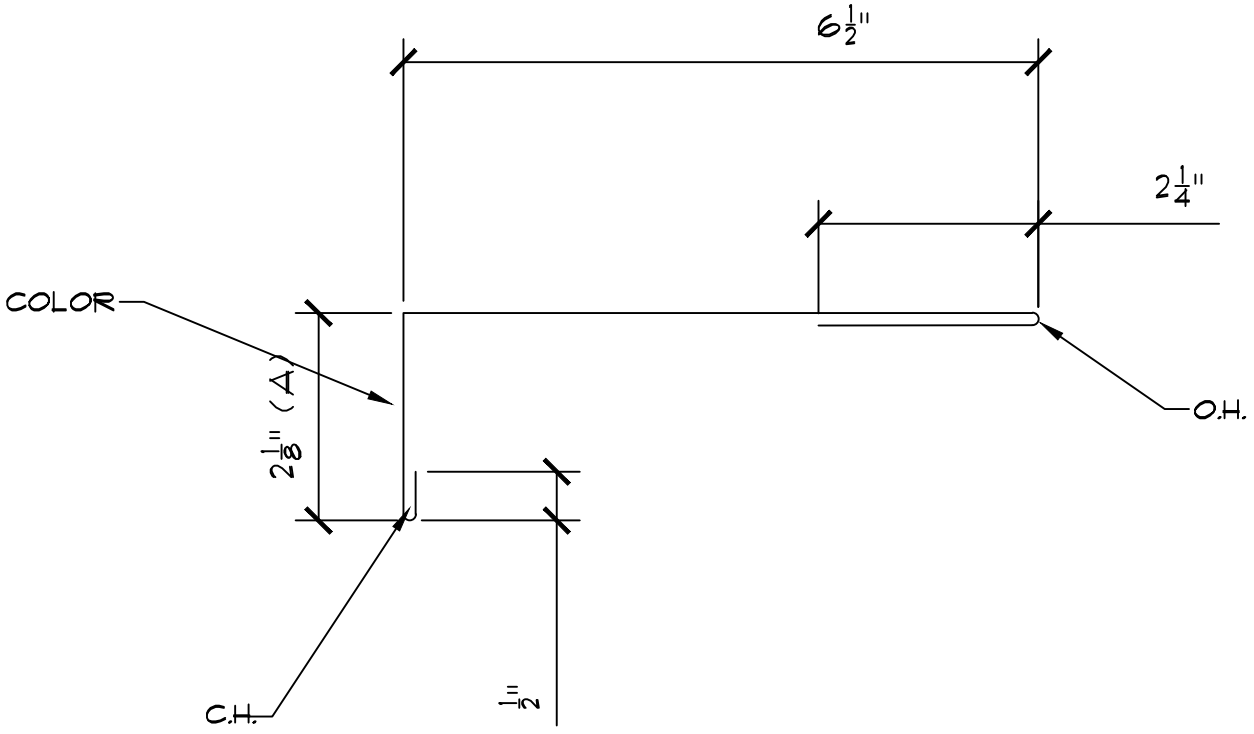

GAUGE:	STRETCH-OUT: 11 3/8"	PART #: EX056
COLOR:	# OF BREAKS: 5	PART NAME:
LENGTH: 10'-0"	QUANTITY:	EXPANSION TRIM

CUSTOMER:	DRAWN BY:	AEP SPAN
JOB NAME:	DATE:	
AEPS ORDER #:	ACCEPTED BY:	
	DATE:	

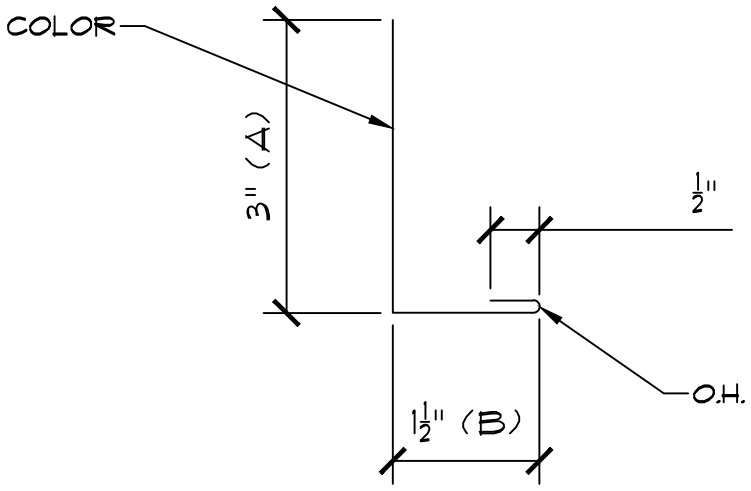

GAUGE:	STRETCH-OUT: 5"	PART #: FT053
COLOR:	# OF BREAKS: 3	PART NAME:
LENGTH: 10'-0"	QUANTITY:	FASCIA/SOFFIT TRIM

CUSTOMER:	DRAWN BY:	AEP SPAN
JOB NAME:	DATE:	
AEPS ORDER #:	ACCEPTED BY:	
	DATE:	

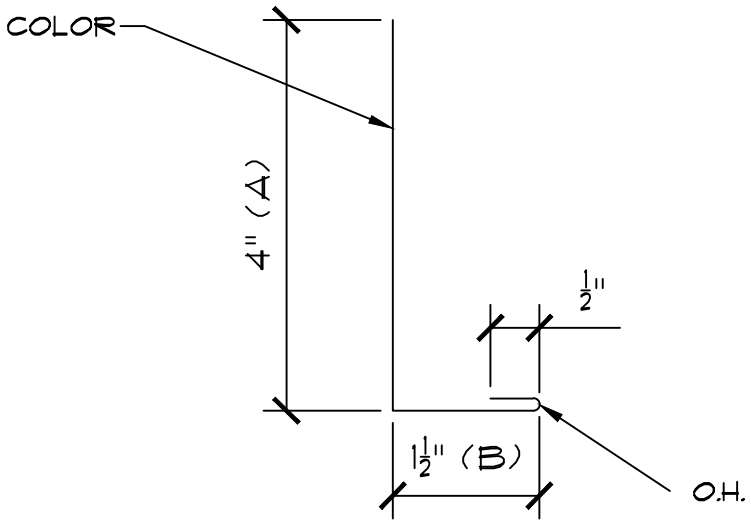

GAUGE:	STRETCH-OUT: 6"	PART #: FT054
COLOR:	# OF BREAKS: 3	PART NAME:
LENGTH: 10'-0"	QUANTITY:	FASCIA/SOFFIT TRIM

CUSTOMER:	DRAWN BY:	AEP SPAN
JOB NAME:	DATE:	
AEPS ORDER #:	ACCEPTED BY:	
	DATE:	

Return to Menu

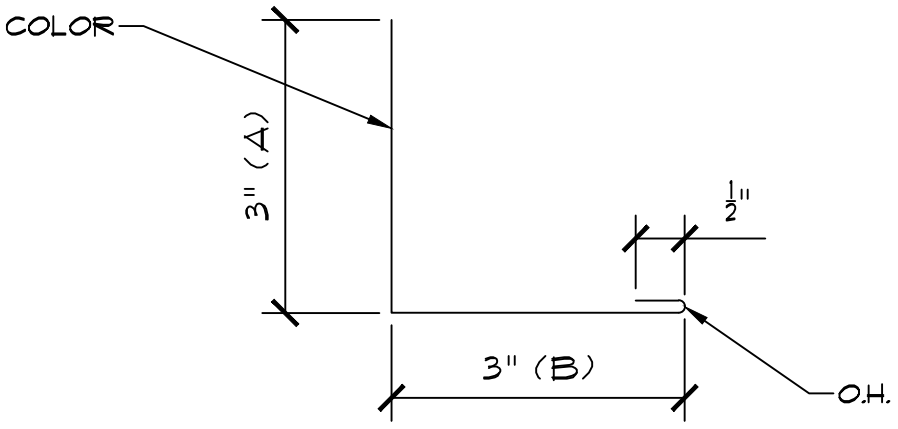

GAUGE:	STRETCH-OUT: 6 1/2"	PART #: FT055
COLOR:	# OF BREAKS: 3	PART NAME:
LENGTH: 10'-0"	QUANTITY:	FASCIA/SOFFIT TRIM

CUSTOMER:	DRAWN BY:	AEP SPAN
JOB NAME:	DATE:	
AEPS ORDER #:	ACCEPTED BY:	
	DATE:	

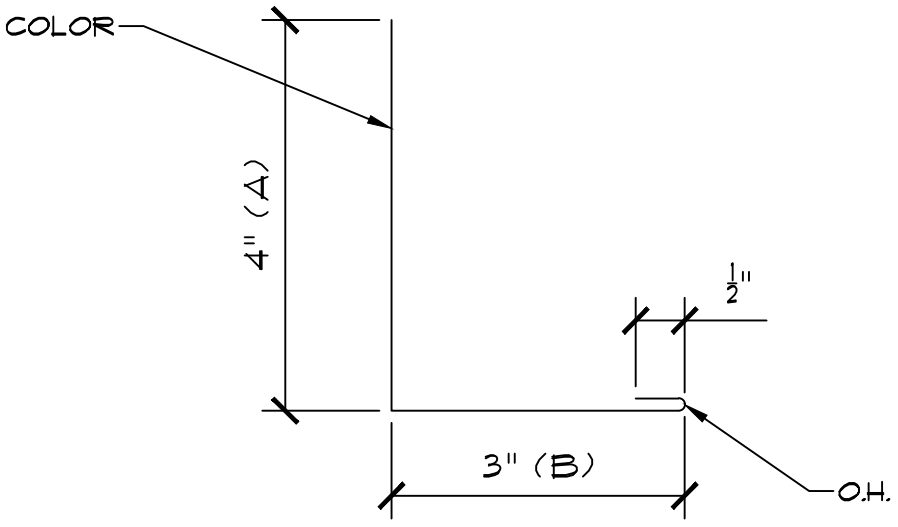

GAUGE:	STRETCH-OUT: 7 1/2"	PART #: FT056
COLOR:	# OF BREAKS: 3	PART NAME:
LENGTH: 10'-0"	QUANTITY:	FASCIA/SOFFIT TRIM

CUSTOMER:	DRAWN BY:	AEP SPAN
JOB NAME:	DATE:	
AEPS ORDER #:	ACCEPTED BY:	
	DATE:	

Return to Menu

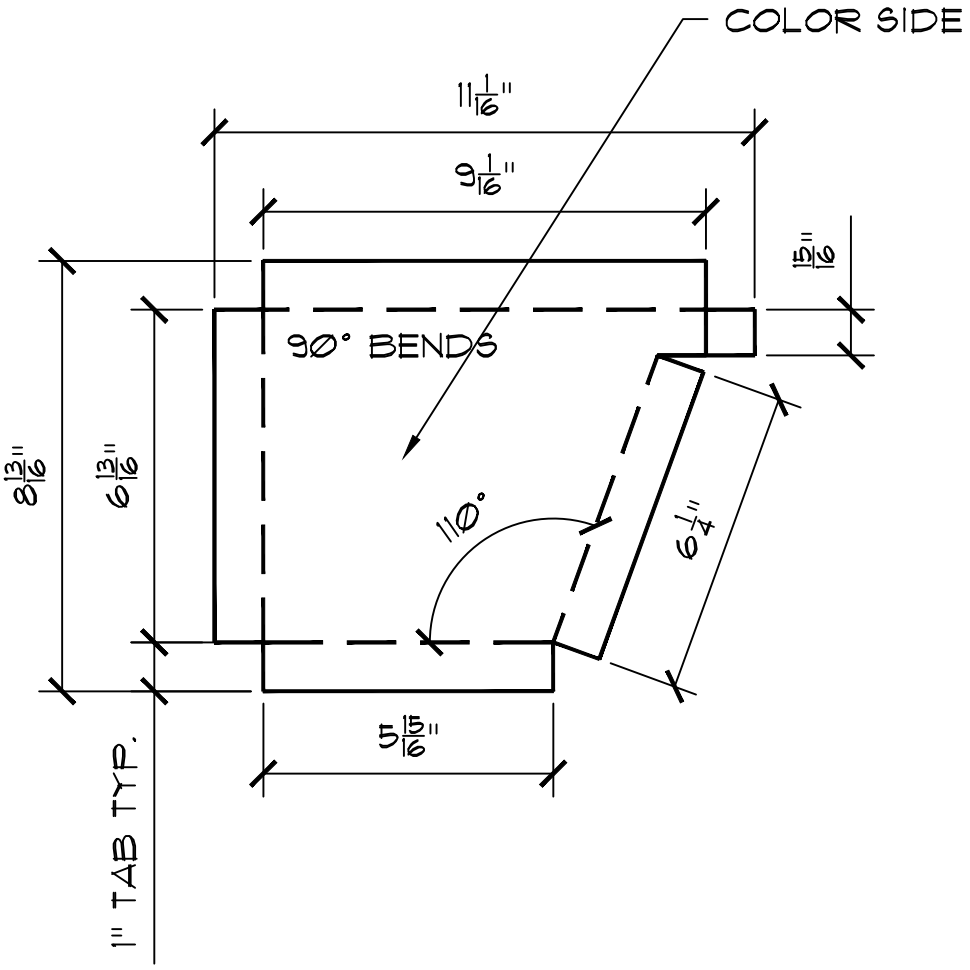

GAUGE:	STRETCH-OUT: 11 1/16"	PART #: GC057
COLOR:	# OF BREAKS: 5	PART NAME:
LENGTH: 8 13/16"	QUANTITY:	LARGE GUTTER END CAP (L)

CUSTOMER:	DRAWN BY:	AEP SPAN
JOB NAME:	DATE:	
AEPS ORDER #:	ACCEPTED BY:	
	DATE:	

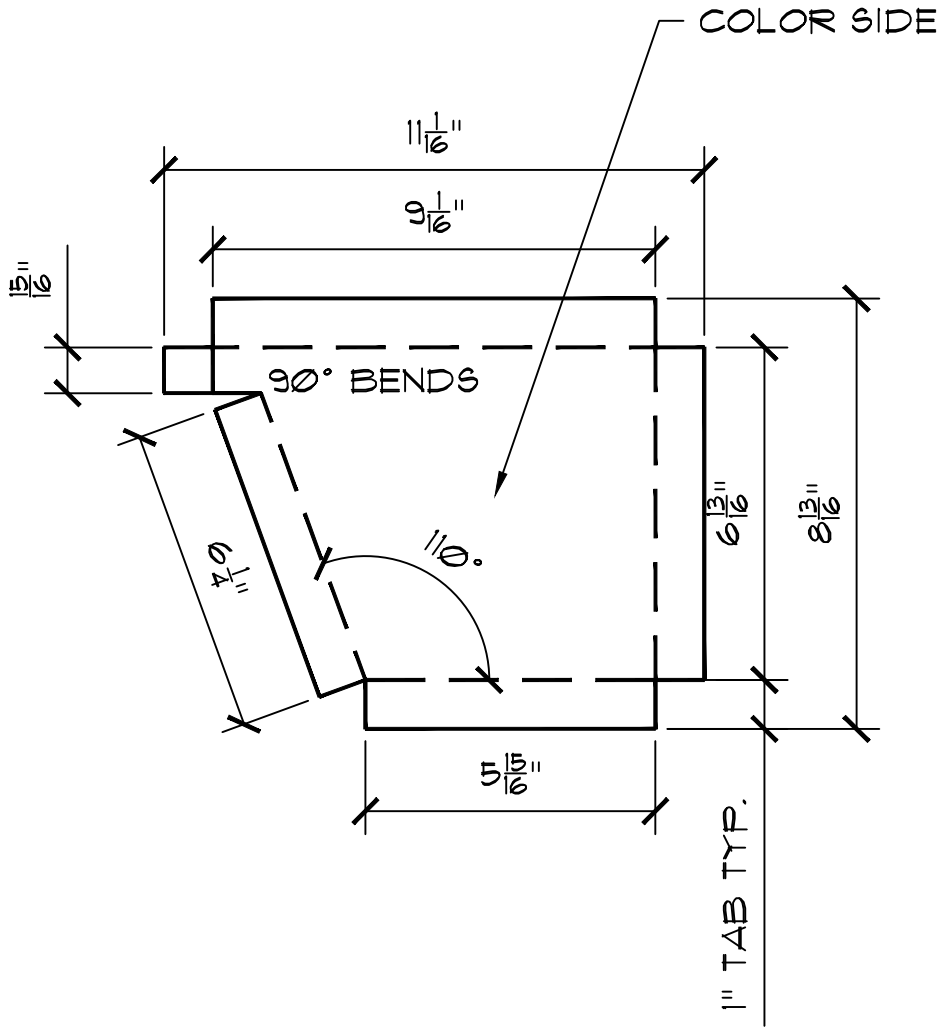

GAUGE:	STRETCH-OUT: 11 1/16"	PART #: GC058
COLOR:	# OF BREAKS: 5	PART NAME:
LENGTH: 8 13/16"	QUANTITY:	LARGE GUTTER END CAP (R)

CUSTOMER:	DRAWN BY:	AEP SPAN
JOB NAME:	DATE:	
AEPS ORDER #:	ACCEPTED BY:	
	DATE:	

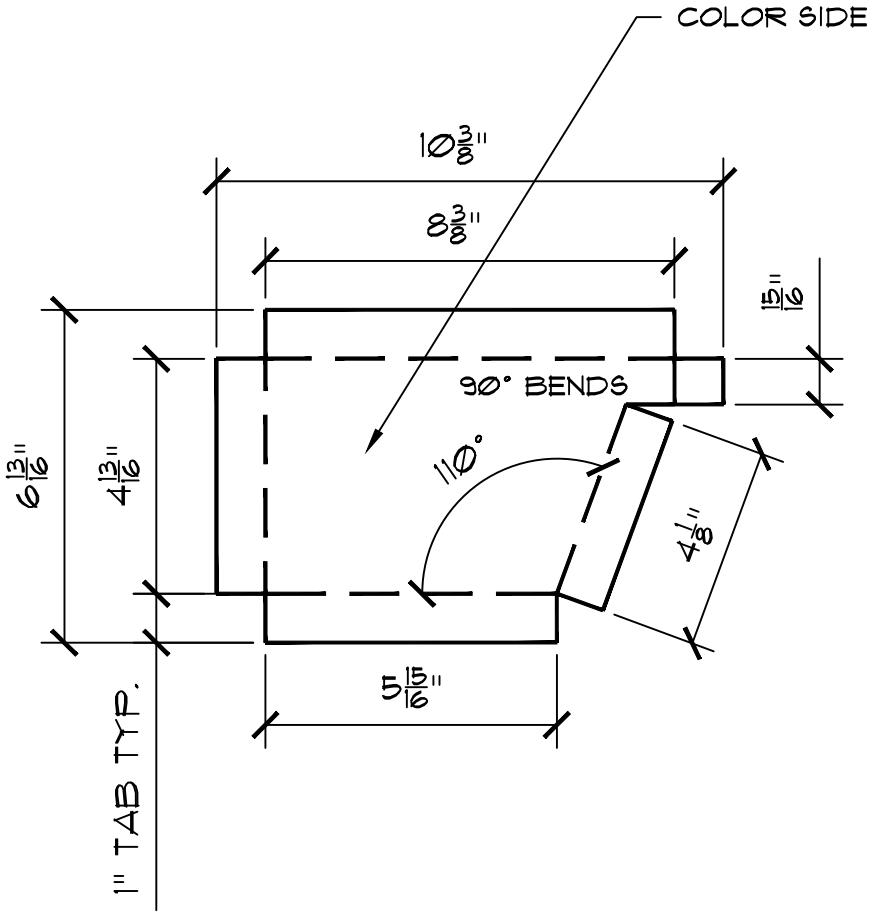

GAUGE:	STRETCH-OUT: 10 3/8"	PART #: GC059
COLOR:	# OF BREAKS: 5	PART NAME:
LENGTH: 6 13/16"	QUANTITY:	SMALL GUTTER END CAP (L)

CUSTOMER:	DRAWN BY:	AEP SPAN
JOB NAME:	DATE:	
AEPS ORDER #:	ACCEPTED BY:	
	DATE:	

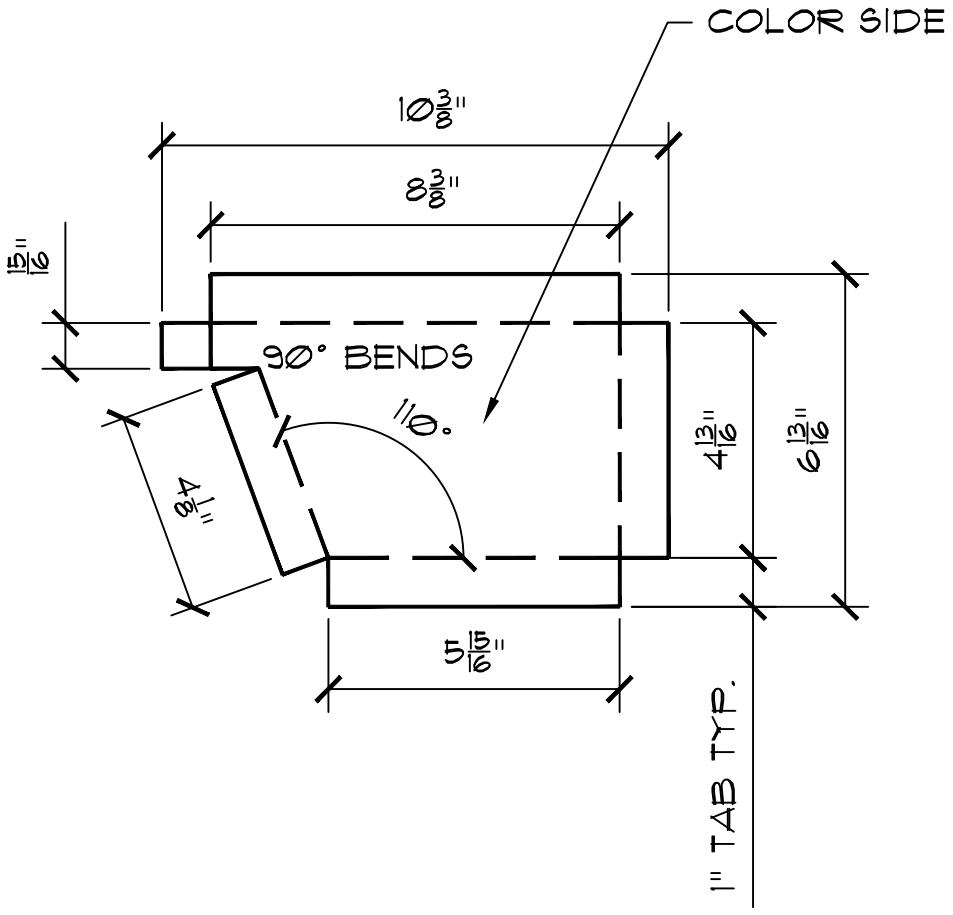

GAUGE:	STRETCH-OUT: 10 3/8"	PART #: GC060
COLOR:	# OF BREAKS: 5	PART NAME:
LENGTH: 6 13/16"	QUANTITY:	SMALL GUTTER END CAP (R)

CUSTOMER:	DRAWN BY:	AEP SPAN
JOB NAME:	DATE:	
AEPS ORDER #:	ACCEPTED BY:	
	DATE:	

Return to Menu

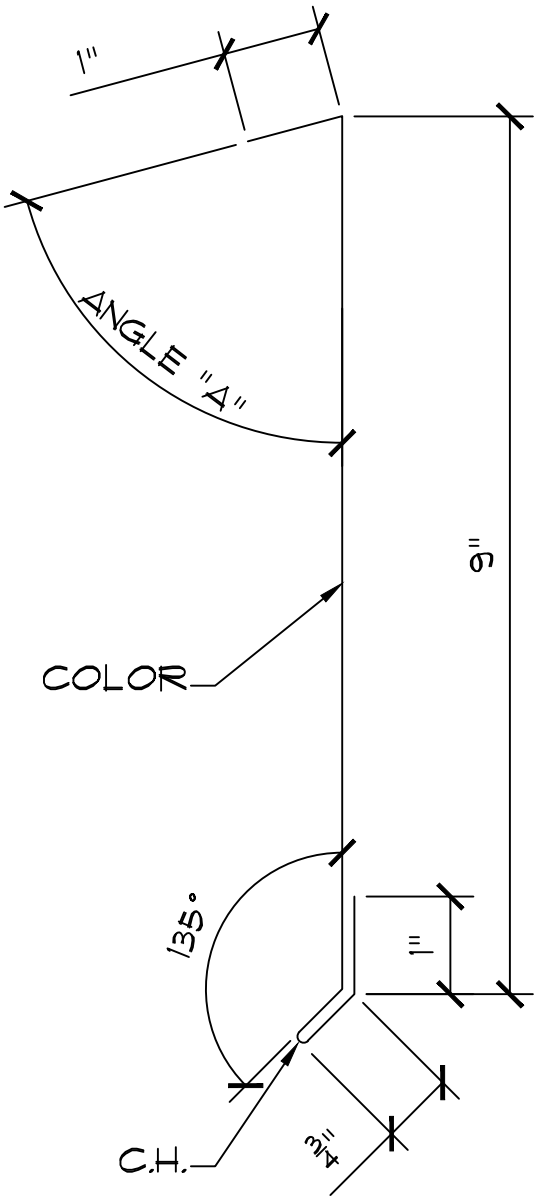

GAUGE:	STRETCH-OUT: 12 1/2"	PART #: GF061
COLOR:	# OF BREAKS: 5	PART NAME:
LENGTH: 10'-0"	QUANTITY:	ROOFOVER GUTTER FLASHING

CUSTOMER:	DRAWN BY:	AEP SPAN
JOB NAME:	DATE:	
AEPS ORDER #:	ACCEPTED BY:	
	DATE:	

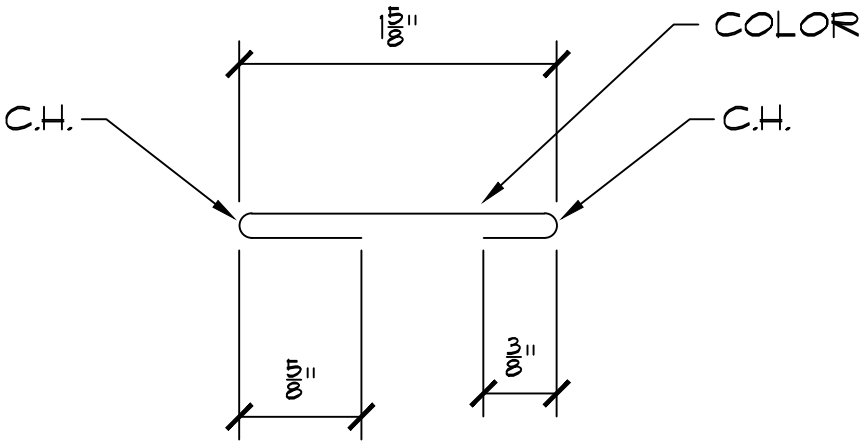

GAUGE:	STRETCH-OUT: 2 5/8"	PART #: GS063
COLOR:	# OF BREAKS: 4	PART NAME: GUTTER STRAP
LENGTH: 10'-0"	QUANTITY:	

CUSTOMER:	DRAWN BY:	AEP SPAN
JOB NAME:	DATE:	
AEPS ORDER #:	ACCEPTED BY:	
	DATE:	

Return to Menu

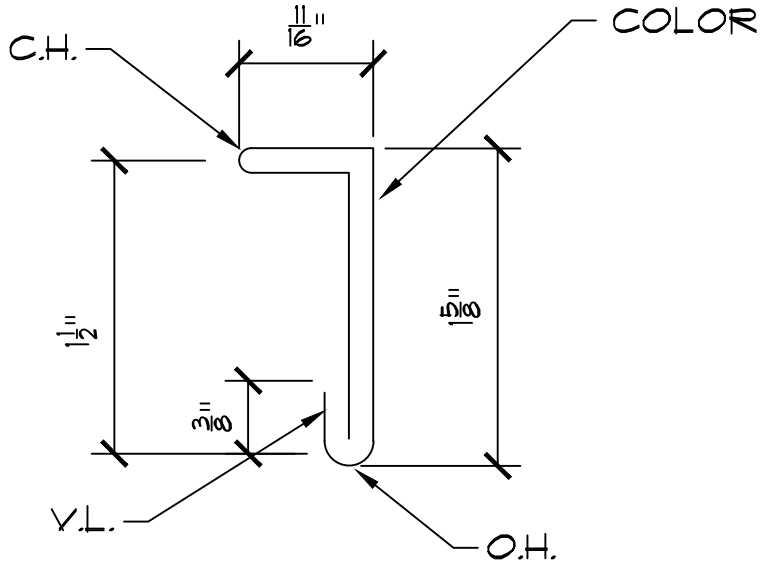

GAUGE:	STRETCH-OUT: 4 7/8"	PART #: GS064
COLOR:	# OF BREAKS: 6	PART NAME:
LENGTH: 10'-0"	QUANTITY:	SPAN-LOK GUTTER STRAP

CUSTOMER:	DRAWN BY:	AEP SPAN
JOB NAME:	DATE:	
AEPS ORDER #:	ACCEPTED BY:	
	DATE:	

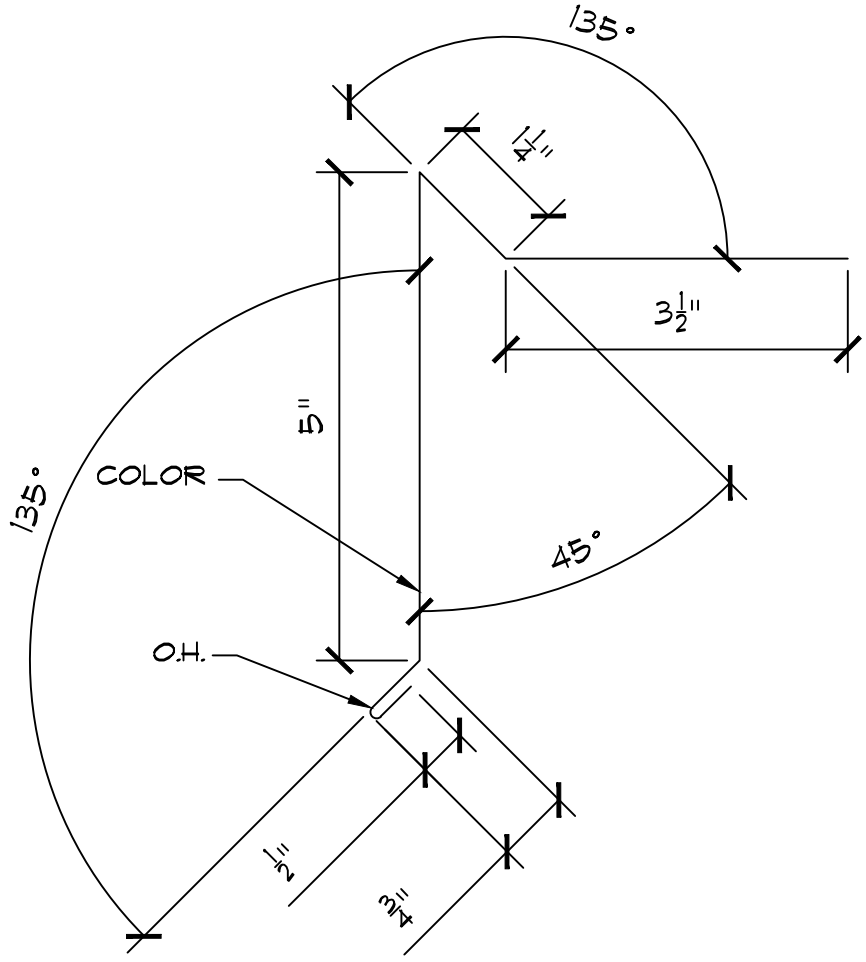

GAUGE:	STRETCH-OUT: 11"	PART #: GT065
COLOR:	# OF BREAKS: 5	PART NAME: GRAVEL STOP
LENGTH: 10'-0"	QUANTITY:	

CUSTOMER:	DRAWN BY:	AEP SPAN
JOB NAME:	DATE:	
AEPS ORDER #:	ACCEPTED BY:	
	DATE:	

Return to Menu

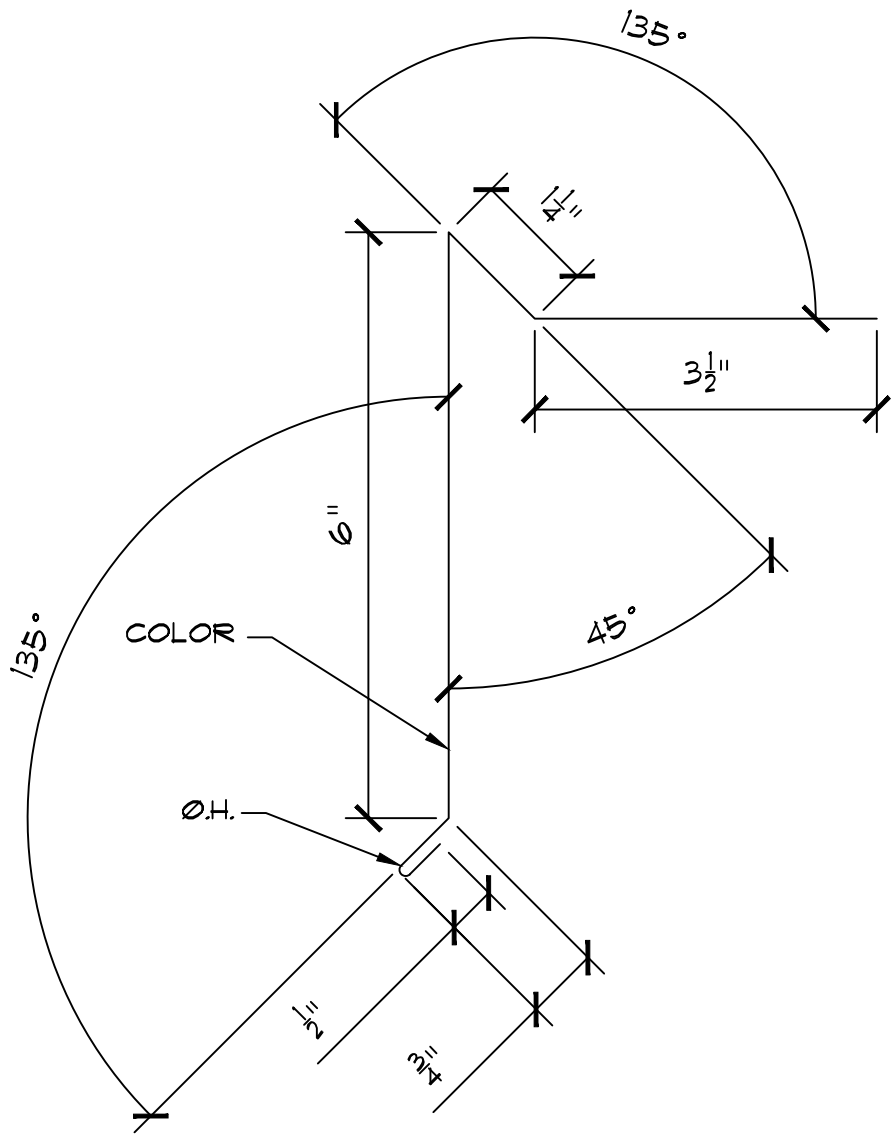

GAUGE:	STRETCH-OUT: 12"	PART #: GT067
COLOR:	# OF BREAKS: 5	PART NAME: GRAVEL STOP
LENGTH: 10'-0"	QUANTITY:	

CUSTOMER:	DRAWN BY:	AEP SPAN
JOB NAME:	DATE:	
AEPS ORDER #:	ACCEPTED BY:	
	DATE:	

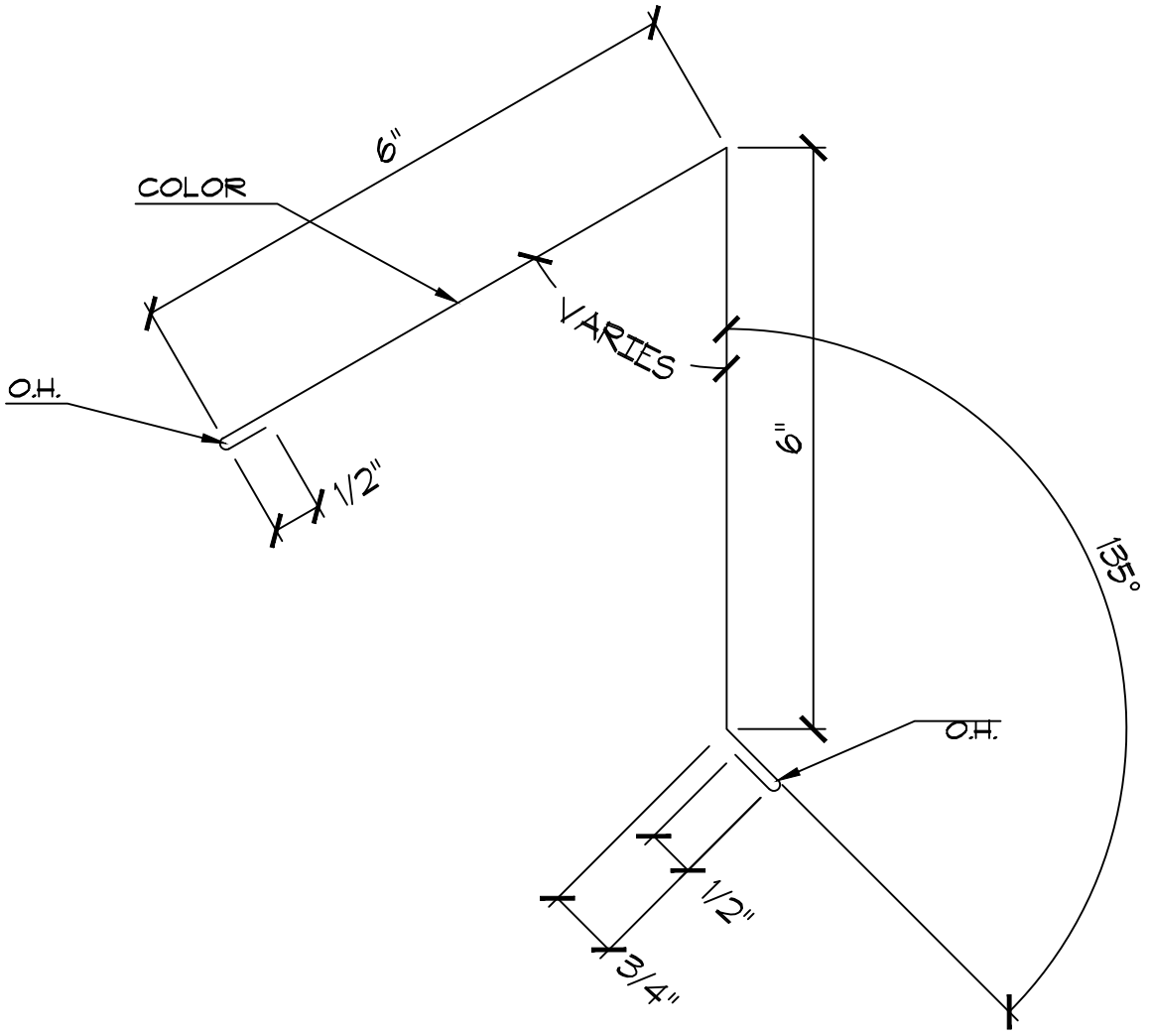

GAUGE:	STRETCH-OUT: 13 3/4"	PART #: HE069
COLOR:	# OF BREAKS: 6	PART NAME:
LENGTH: 10'-0"	QUANTITY:	HIGH EAVE TRIM

CUSTOMER:	DRAWN BY:	AEP SPAN
JOB NAME:	DATE:	
AEPS ORDER #:	ACCEPTED BY:	
	DATE:	

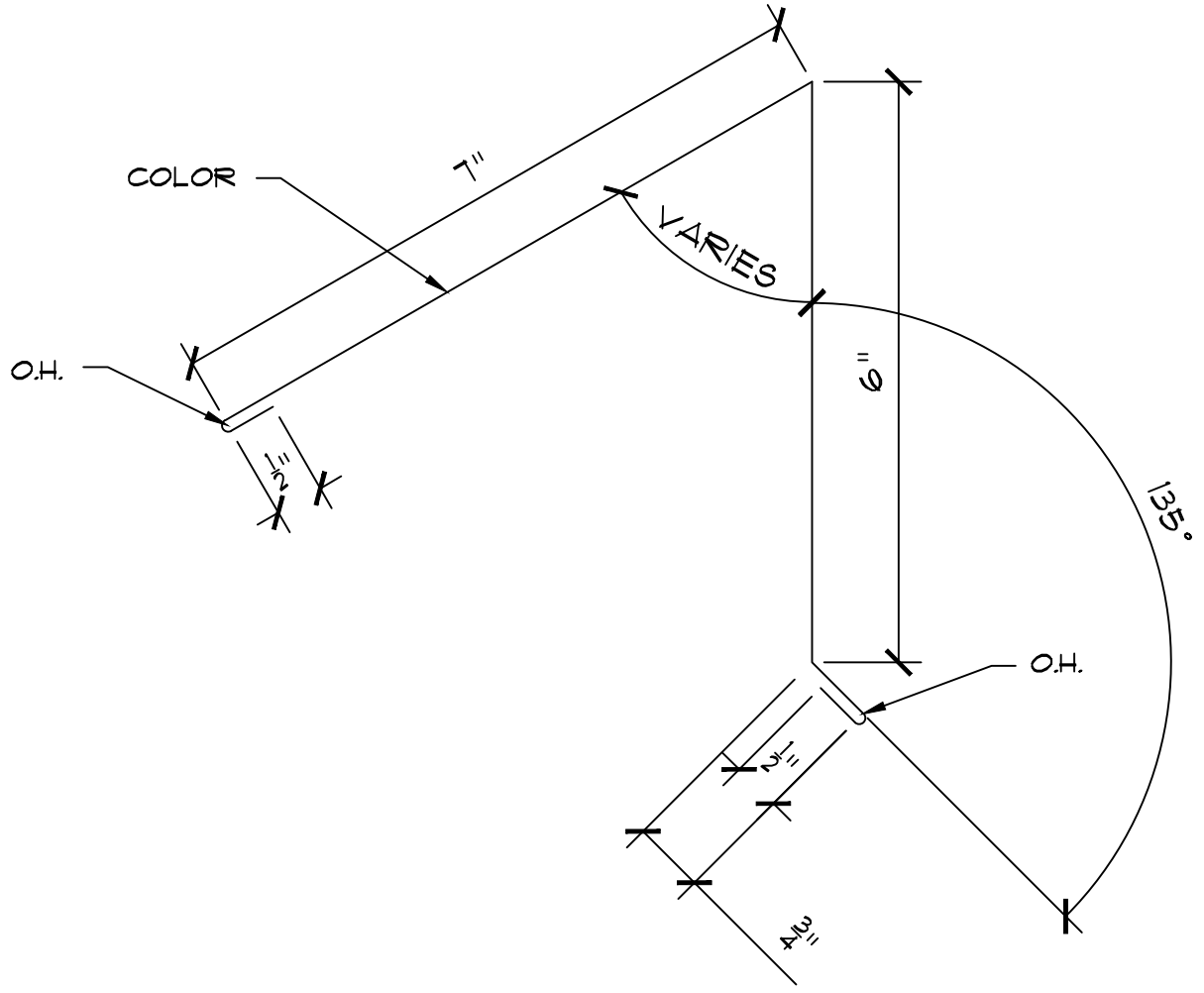

GAUGE:	STRETCH-OUT: 14 3/4"	PART #: HE071
COLOR:	# OF BREAKS: 6	PART NAME:
LENGTH: 10'-0"	QUANTITY:	HIGH EAVE TRIM

CUSTOMER:	DRAWN BY:	AEP SPAN
JOB NAME:	DATE:	
AEPS ORDER #:	ACCEPTED BY:	
	DATE:	

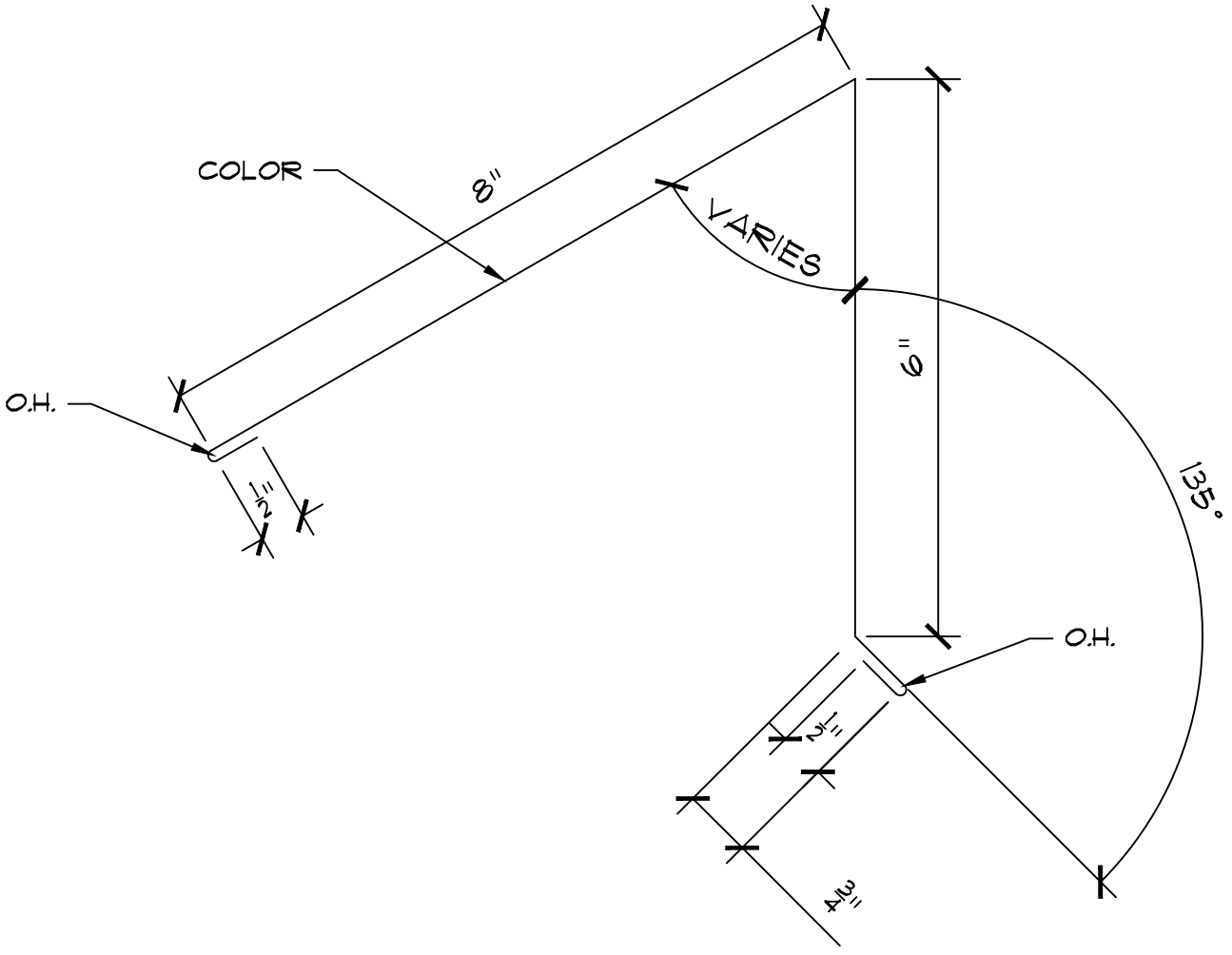

GAUGE:	STRETCH-OUT: 15 3/4"	PART #: HE073
COLOR:	# OF BREAKS: 6	PART NAME:
LENGTH: 10'-0"	QUANTITY:	HIGH EAVE TRIM

CUSTOMER:	DRAWN BY:	AEP SPAN
JOB NAME:	DATE:	
AEPS ORDER #:	ACCEPTED BY:	
	DATE:	

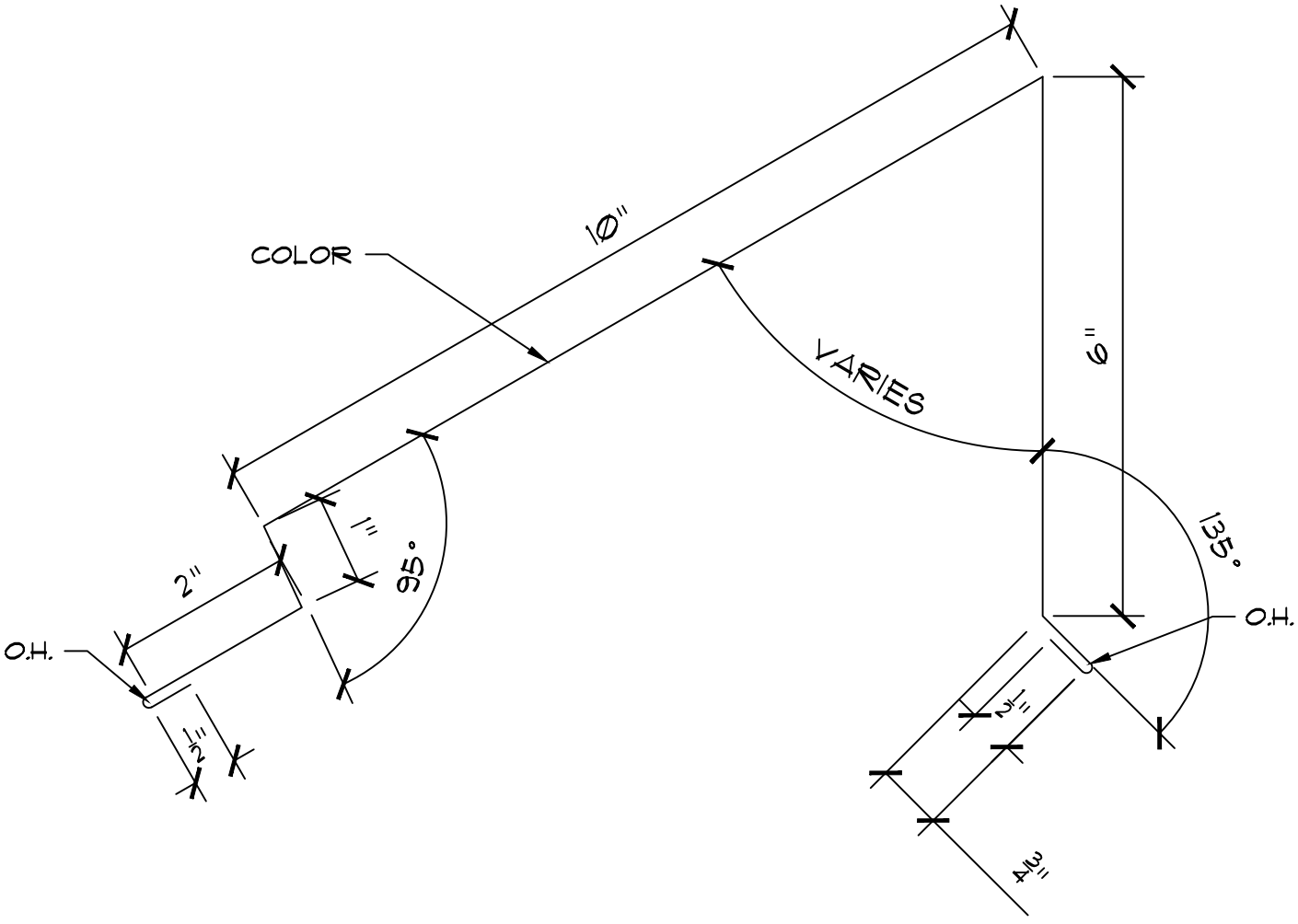

GAUGE:	STRETCH-OUT: 20 3/4"	PART #: HE075
COLOR:	# OF BREAKS: 8	PART NAME:
LENGTH: 10'-0"	QUANTITY:	VENTED HIGH EAVE TRIM

CUSTOMER:	DRAWN BY:	AEP SPAN
JOB NAME:	DATE:	
AEPS ORDER #:	ACCEPTED BY:	
	DATE:	

Return to Menu

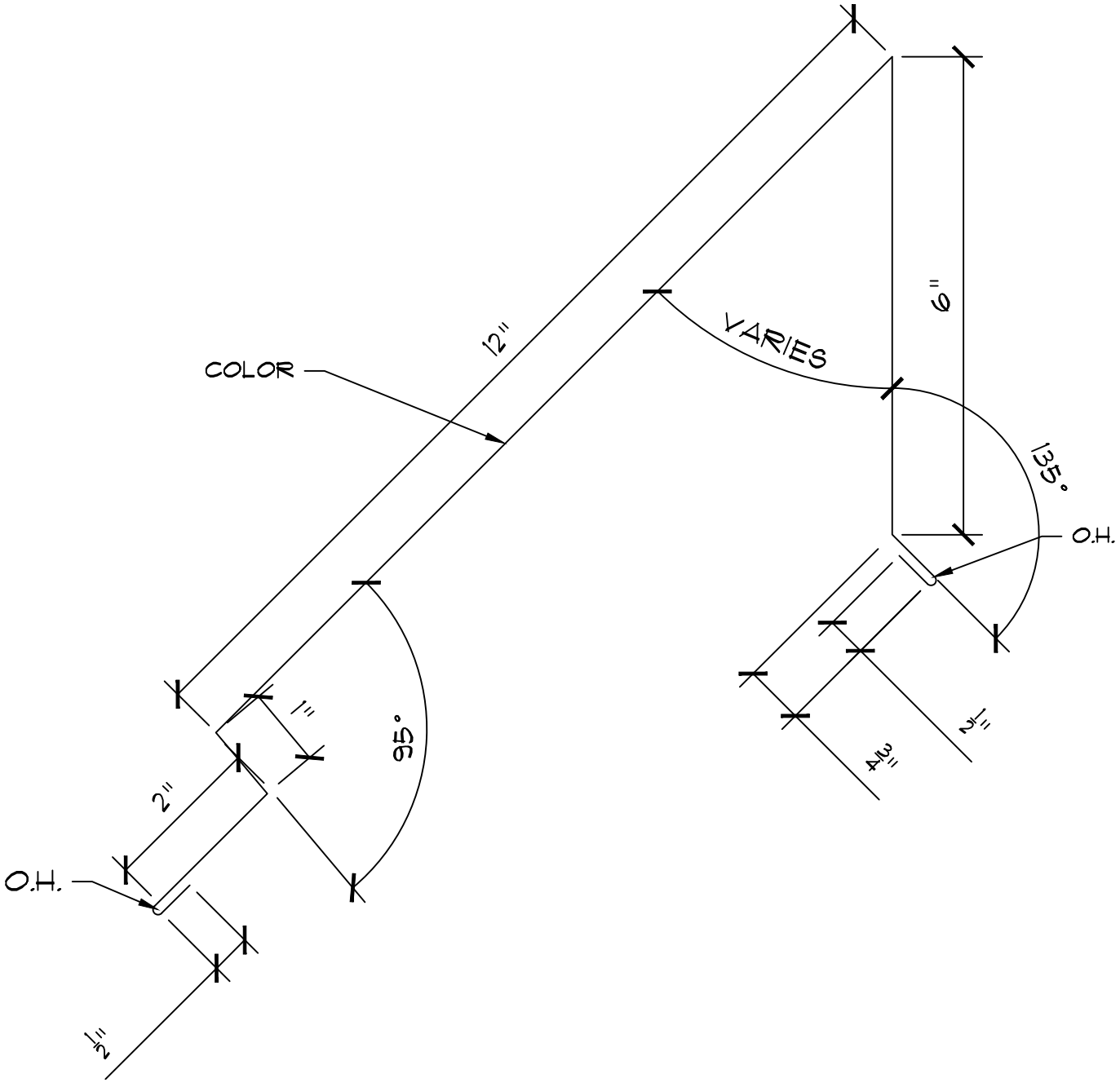

GAUGE:	STRETCH-OUT: 22 3/4"	PART #: HE077
COLOR:	# OF BREAKS: 8	PART NAME:
LENGTH: 10'-0"	QUANTITY:	VENTED HIGH EAVE TRIM

CUSTOMER:	DRAWN BY:	AEP SPAN
JOB NAME:	DATE:	
AEPS ORDER #:	ACCEPTED BY:	
	DATE:	

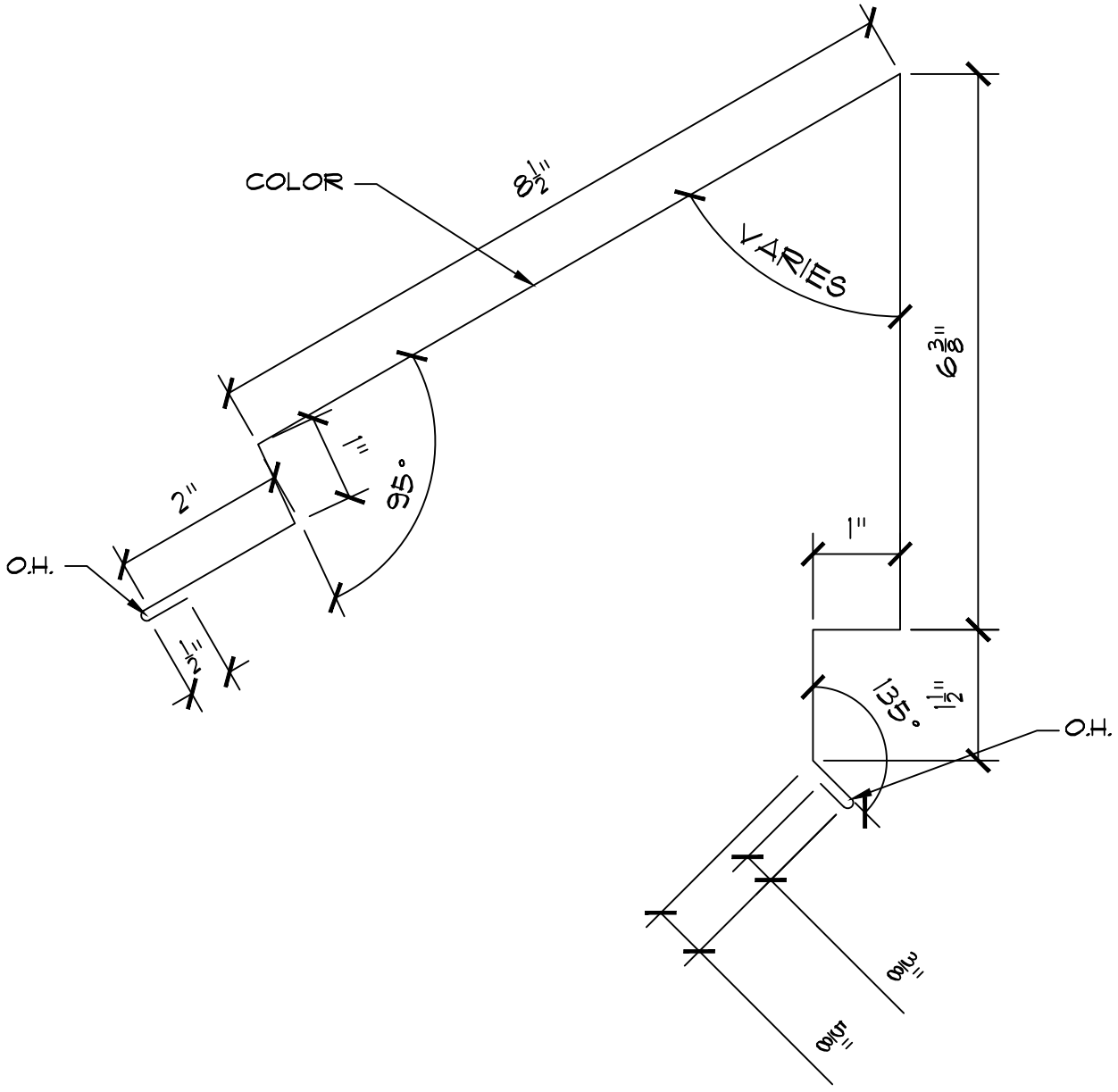

GAUGE:	STRETCH-OUT: 21 7/8"	PART #: HE079
COLOR:	# OF BREAKS: 10	PART NAME:
LENGTH: 10'-0"	QUANTITY:	NON-VENTED HIGH EAVE TRIM

CUSTOMER:	DRAWN BY:	AEP SPAN
JOB NAME:	DATE:	
AEPS ORDER #:	ACCEPTED BY:	
	DATE:	

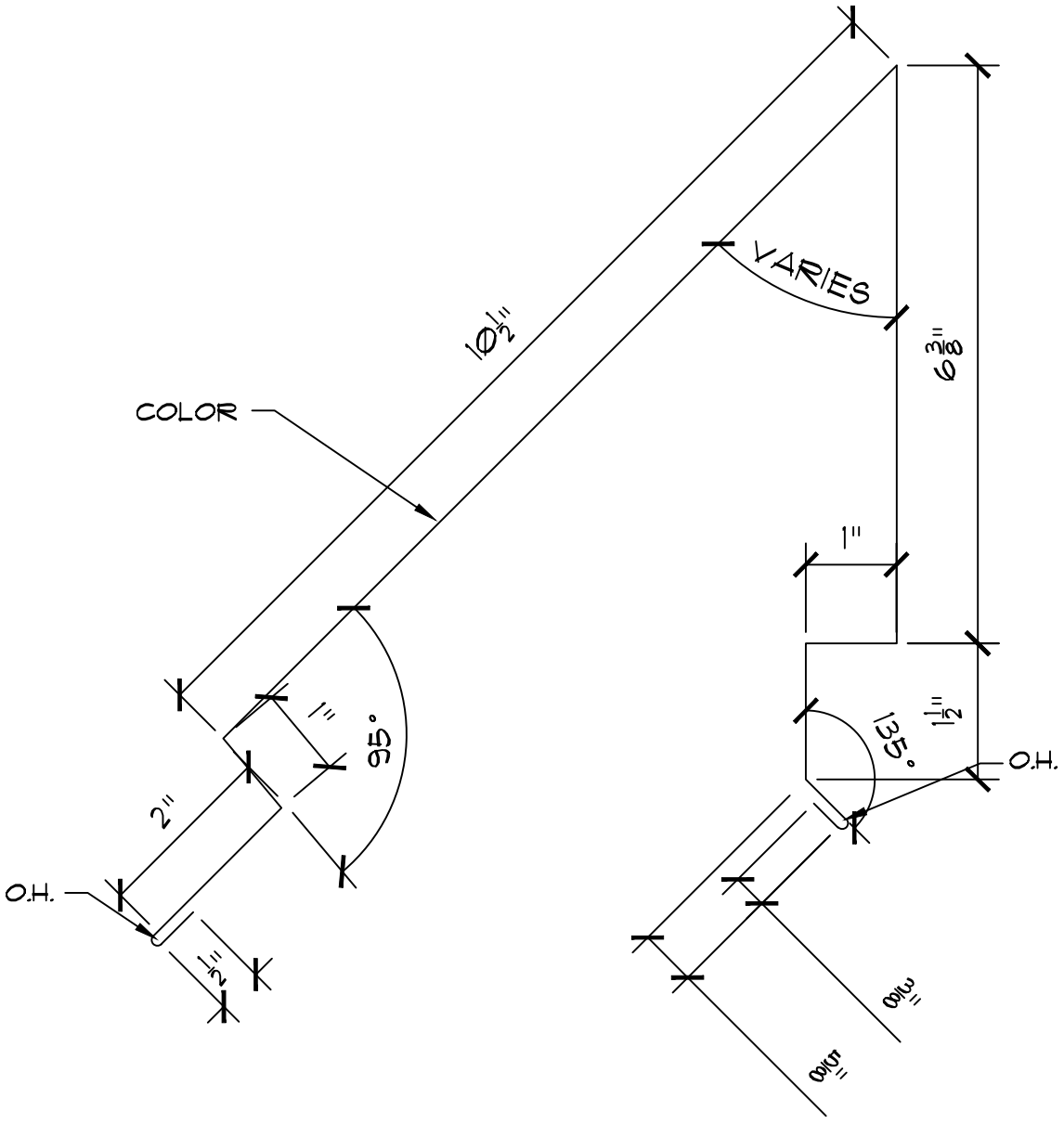

GAUGE:	STRETCH-OUT: 23 7/8"	PART #: HE081
COLOR:	# OF BREAKS: 10	PART NAME:
LENGTH: 10'-0"	QUANTITY:	NON-VENTED HIGH EAVE TRIM

CUSTOMER:	DRAWN BY:	AEP SPAN
JOB NAME:	DATE:	
AEPS ORDER #:	ACCEPTED BY:	
	DATE:	

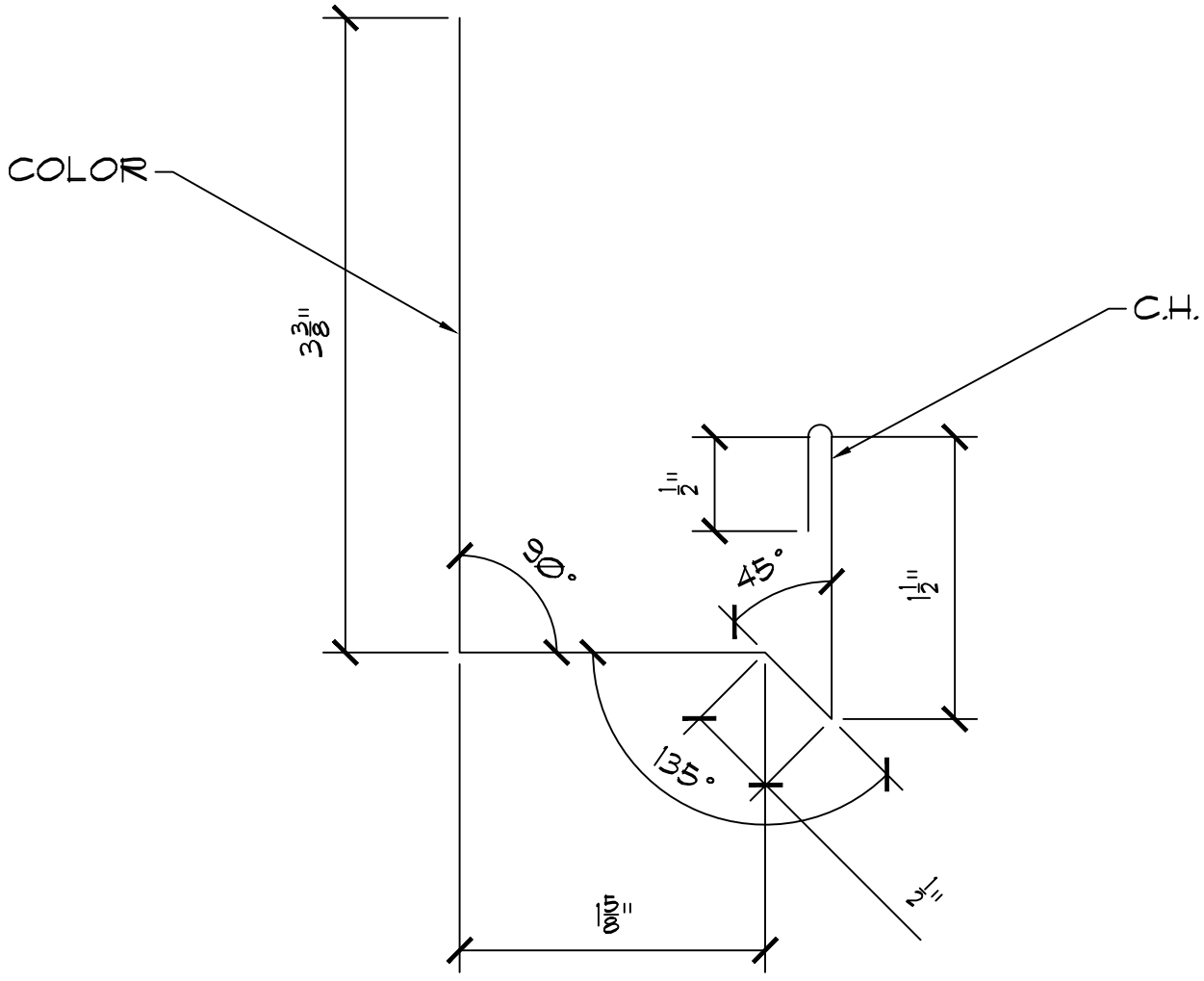

GAUGE:	STRETCH-OUT: 7 1/2"	PART #: HT085
COLOR:	# OF BREAKS: 5	PART NAME: HEADER TRIM
LENGTH: 10'-0"	QUANTITY:	

CUSTOMER:	DRAWN BY:	AEP SPAN
JOB NAME:	DATE:	
AEPS ORDER #:	ACCEPTED BY:	
	DATE:	

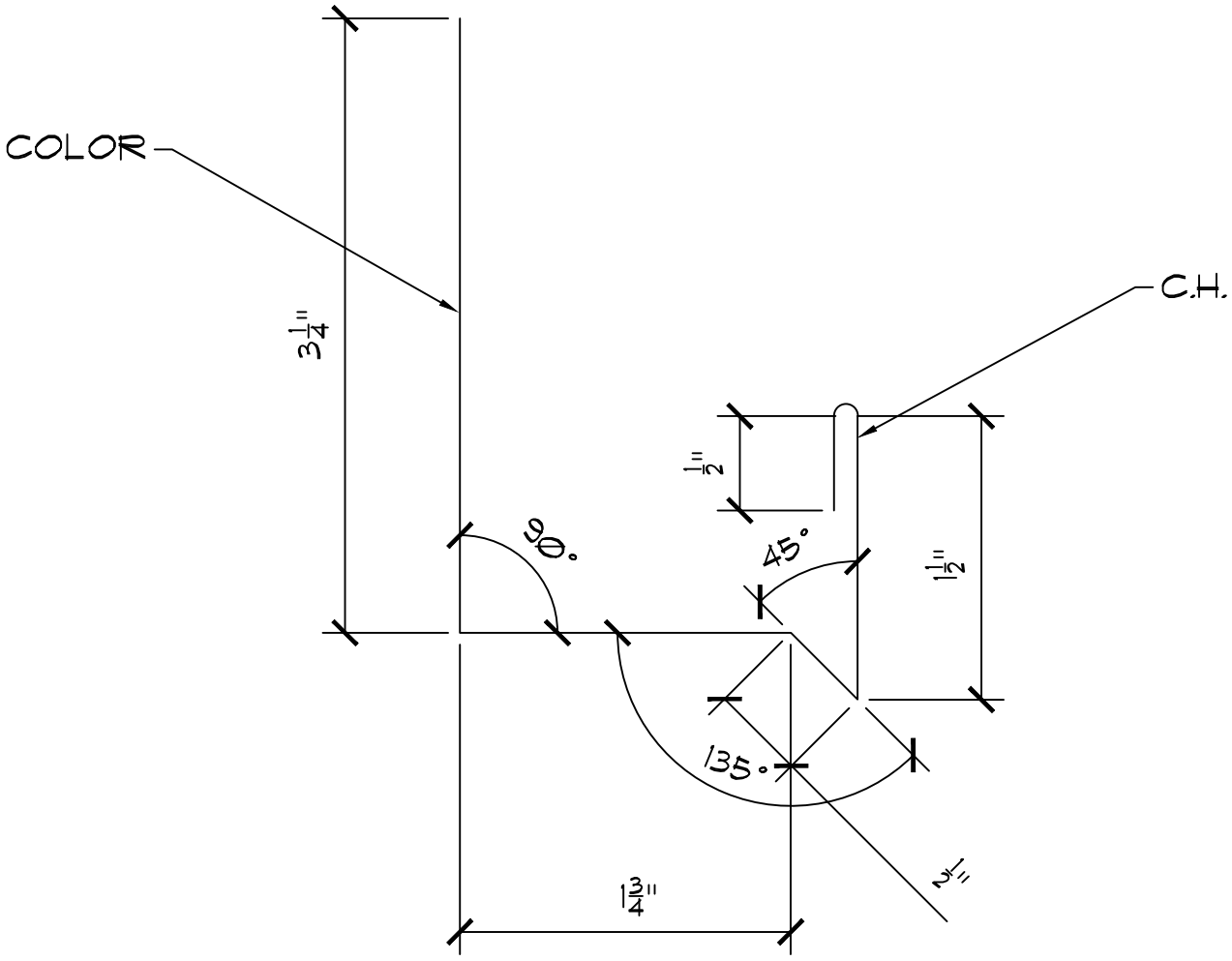

GAUGE:	STRETCH-OUT: 7 1/2"	PART #: HT087
COLOR:	# OF BREAKS: 5	PART NAME: HEADER TRIM
LENGTH: 10'-0"	QUANTITY:	

CUSTOMER:	DRAWN BY:	AEP SPAN
JOB NAME:	DATE:	
AEPS ORDER #:	ACCEPTED BY:	
	DATE:	

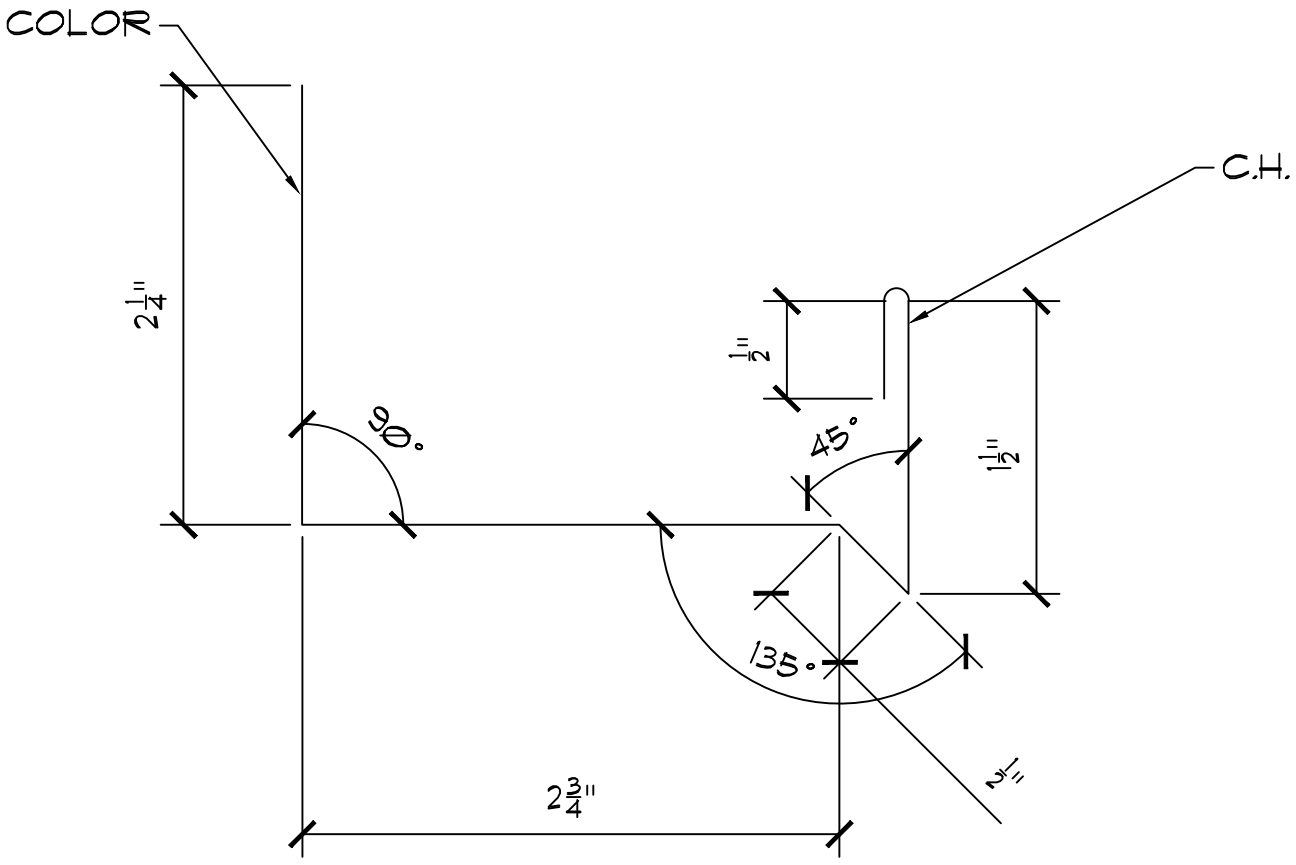

GAUGE:	STRETCH-OUT: 7 1/2"	PART #: HT089
COLOR:	# OF BREAKS: 5	PART NAME: HEADER TRIM
LENGTH: 10'-0"	QUANTITY:	

CUSTOMER:	DRAWN BY:	AEP SPAN
JOB NAME:	DATE:	
AEPS ORDER #:	ACCEPTED BY:	
	DATE:	

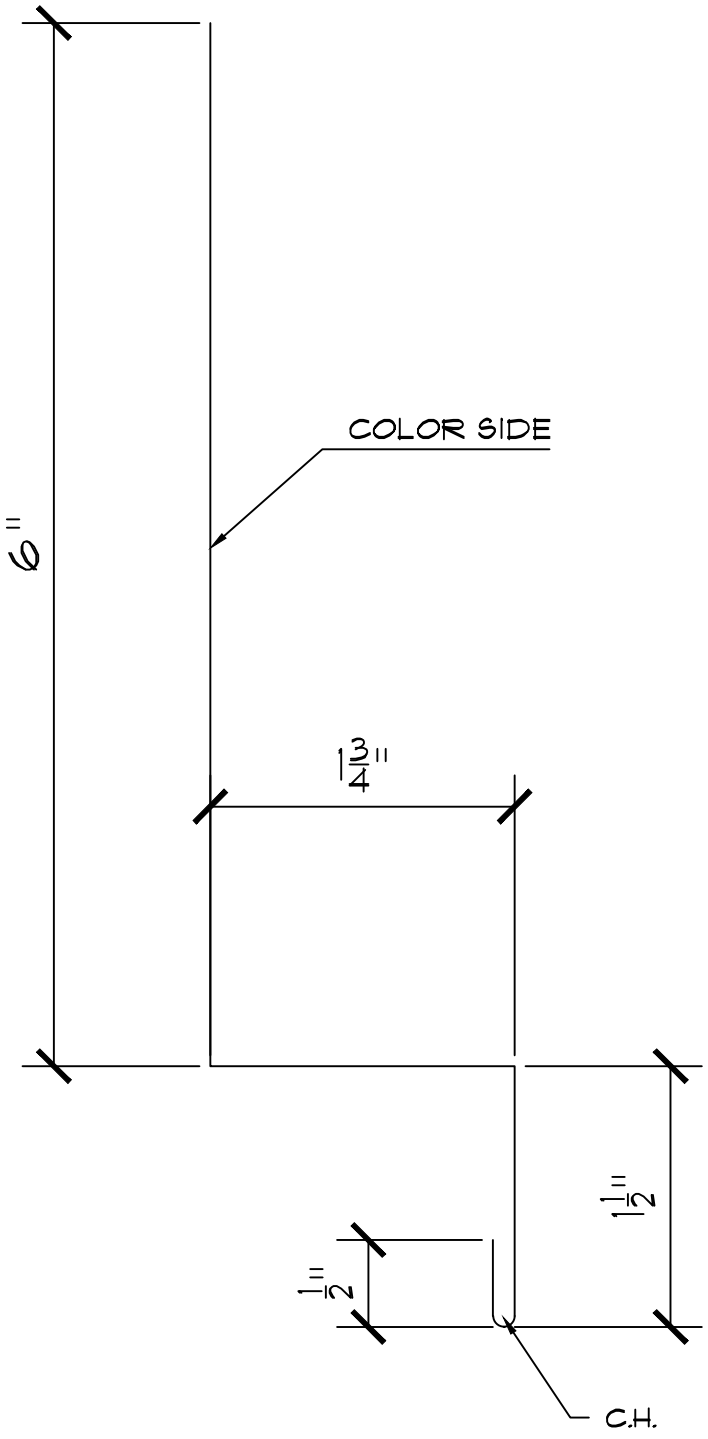

GAUGE:	STRETCH-OUT: 9 3/4"	PART #: HT090
COLOR:	# OF BREAKS: 4	PART NAME:
LENGTH: 10'-0"	QUANTITY:	END SPLICE/SILL

CUSTOMER:	DRAWN BY:	AEP SPAN
JOB NAME:	DATE:	
AEPS ORDER #:	ACCEPTED BY:	
	DATE:	

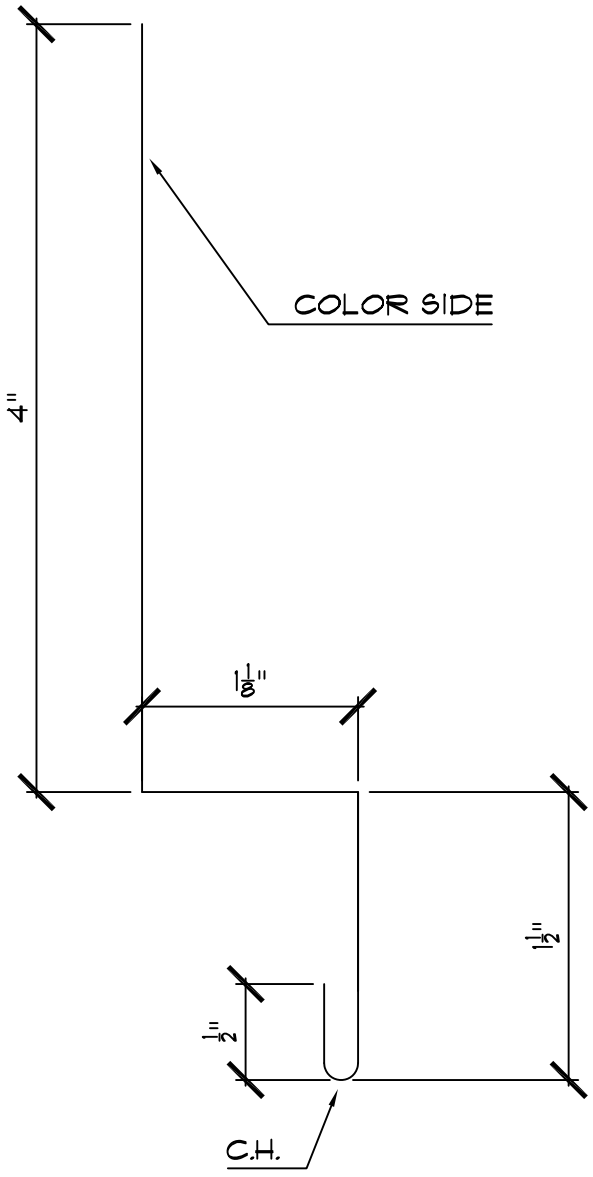

GAUGE:	STRETCH-OUT: 7 1/8"	PART #: HT092
COLOR:	# OF BREAKS: 4	PART NAME:
LENGTH: 10'-0"	QUANTITY:	HEADER TRIM

CUSTOMER:	DRAWN BY: BMG	AEP SPAN
JOB NAME:	DATE: 8/01/16	
AEPS ORDER #:	ACCEPTED BY:	
	DATE:	

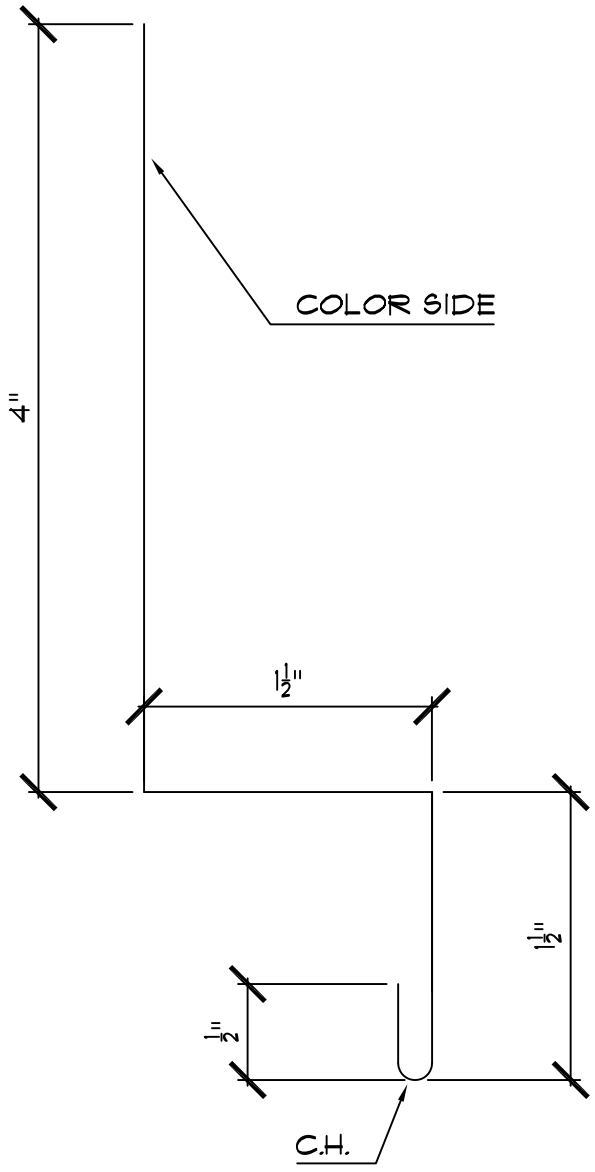

GAUGE:	STRETCH-OUT: 7 1/2"	PART #: HT096
COLOR:	# OF BREAKS: 4	PART NAME:
LENGTH: 10'-0"	QUANTITY:	HEADER TRIM

CUSTOMER:	DRAWN BY: BMG	AEP SPAN
JOB NAME:	DATE: 8/01/16	
AEPS ORDER #:	ACCEPTED BY:	
	DATE:	

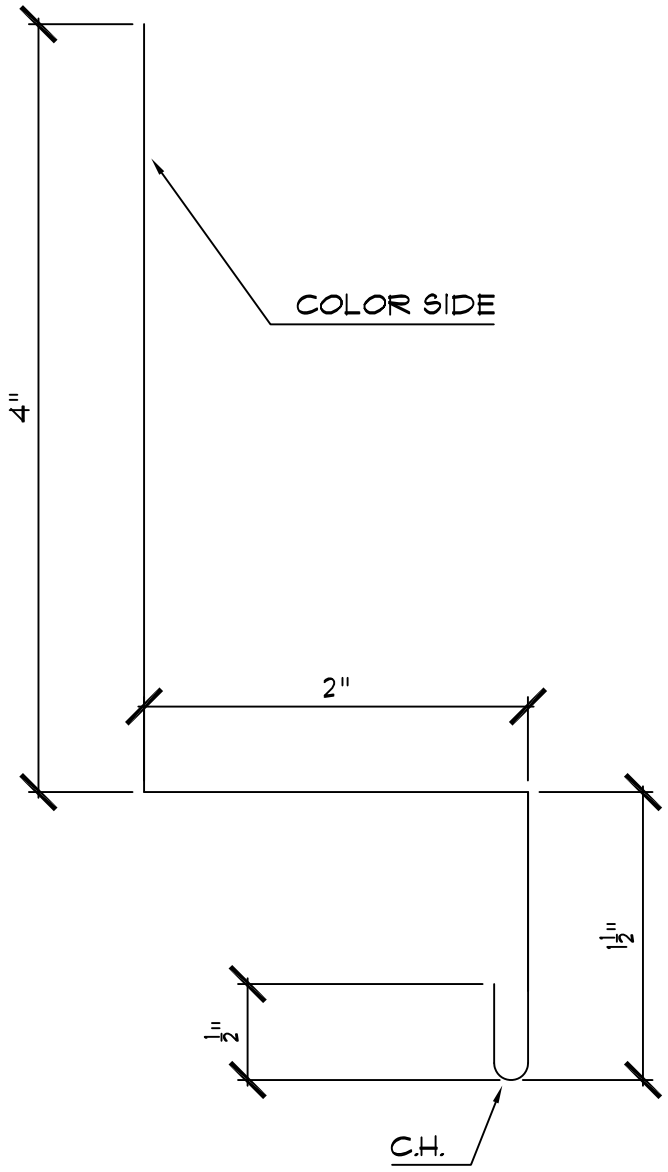

GAUGE:	STRETCH–OUT: 8"	PART #: HT097
COLOR:	# OF BREAKS: 4	PART NAME:
LENGTH: 10'-0"	QUANTITY:	HEADER TRIM

CUSTOMER:	DRAWN BY: BMG	AEP SPAN
JOB NAME:	DATE: 8/01/16	
AEPS ORDER #:	ACCEPTED BY:	
	DATE:	

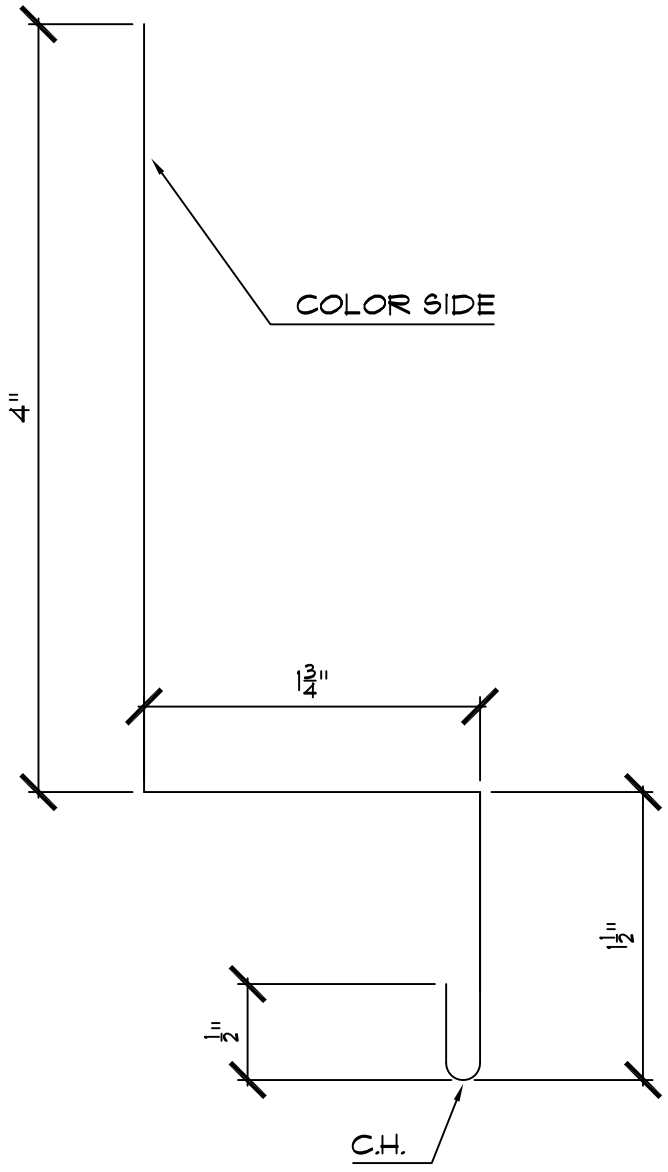

GAUGE:	STRETCH-OUT: 7 3/4"	PART #: HT098
COLOR:	# OF BREAKS: 4	PART NAME:
LENGTH: 10'-0"	QUANTITY:	HEADER TRIM

CUSTOMER:	DRAWN BY: BMG	AEP SPAN
JOB NAME:	DATE: 8/01/16	
AEPS ORDER #:	ACCEPTED BY:	
	DATE:	

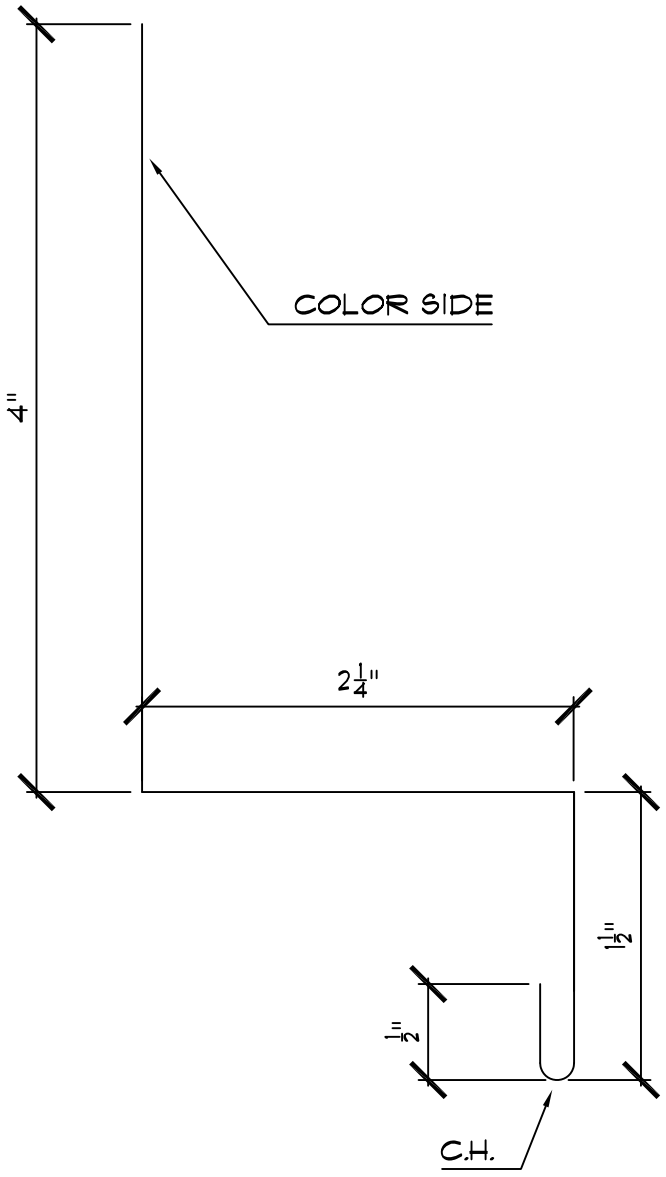

GAUGE:	STRETCH-OUT: 8 1/4"	PART #: HT099
COLOR:	# OF BREAKS: 4	PART NAME:
LENGTH: 10'-0"	QUANTITY:	HEADER TRIM

CUSTOMER:	DRAWN BY: BMG	AEP SPAN
JOB NAME:	DATE: 8/01/16	
AEPS ORDER #:	ACCEPTED BY:	
	DATE:	

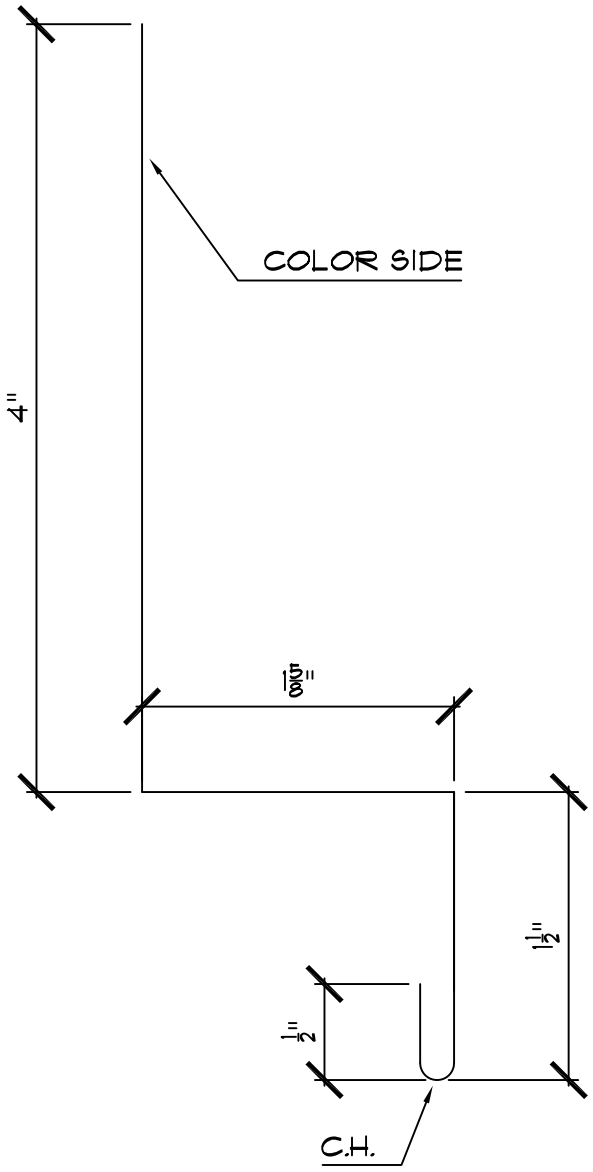

GAUGE:	STRETCH-OUT: 7 5/8"	PART #: HT103
COLOR:	# OF BREAKS: 4	PART NAME:
LENGTH: 10'-0"	QUANTITY:	HEADER TRIM

CUSTOMER:	DRAWN BY: BMG	AEP SPAN
JOB NAME:	DATE: 8/01/16	
AEPS ORDER #:	ACCEPTED BY:	
	DATE:	

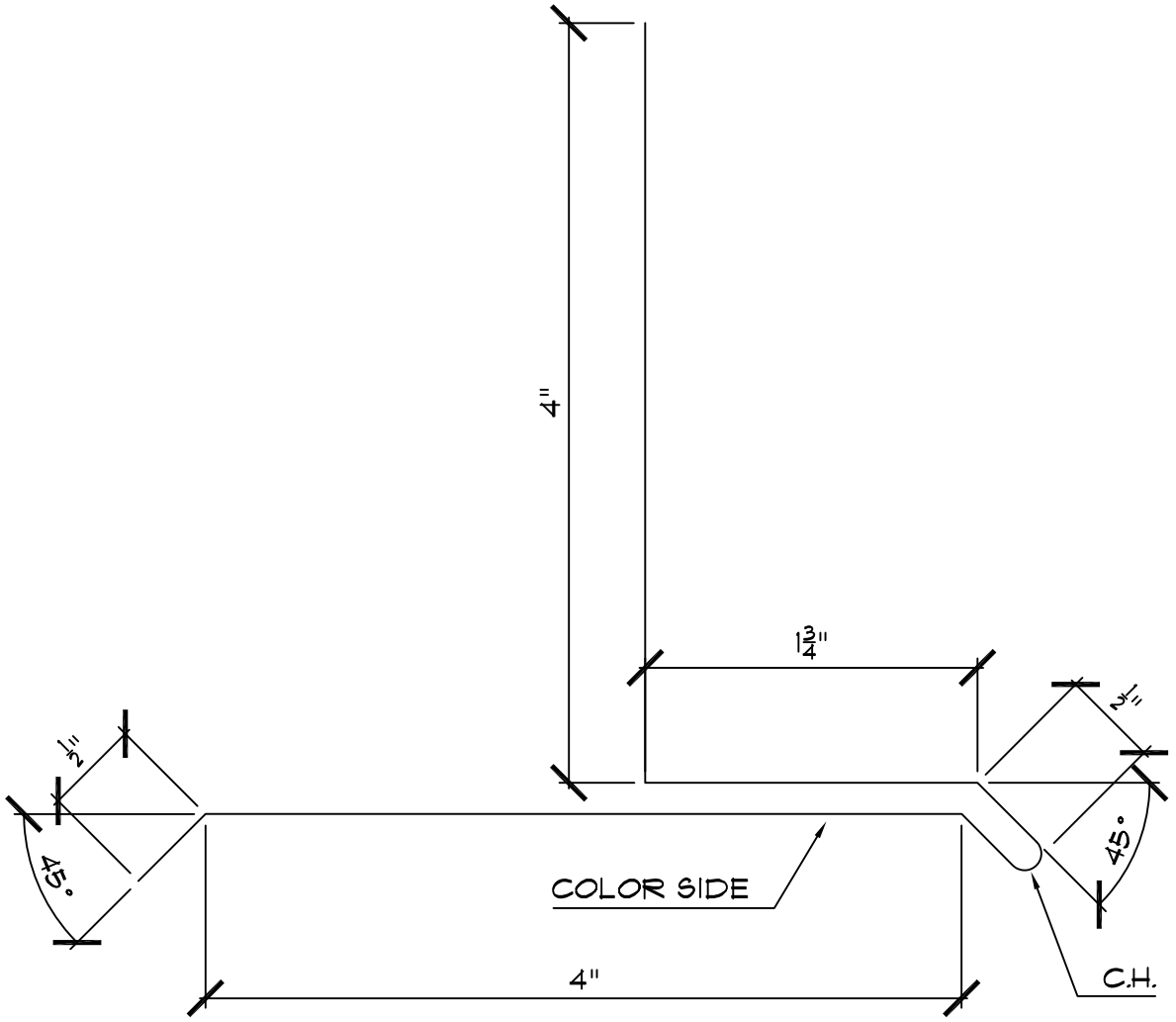

GAUGE:	STRETCH-OUT: 11 1/4"	PART #: HT091
COLOR:	# OF BREAKS: 6	PART NAME:
LENGTH: 10'-0"	QUANTITY:	HEADER TRIM

CUSTOMER:	DRAWN BY: BMG	AEP SPAN
JOB NAME:	DATE: 8/1/16	
AEPS ORDER #:	ACCEPTED BY:	
	DATE:	

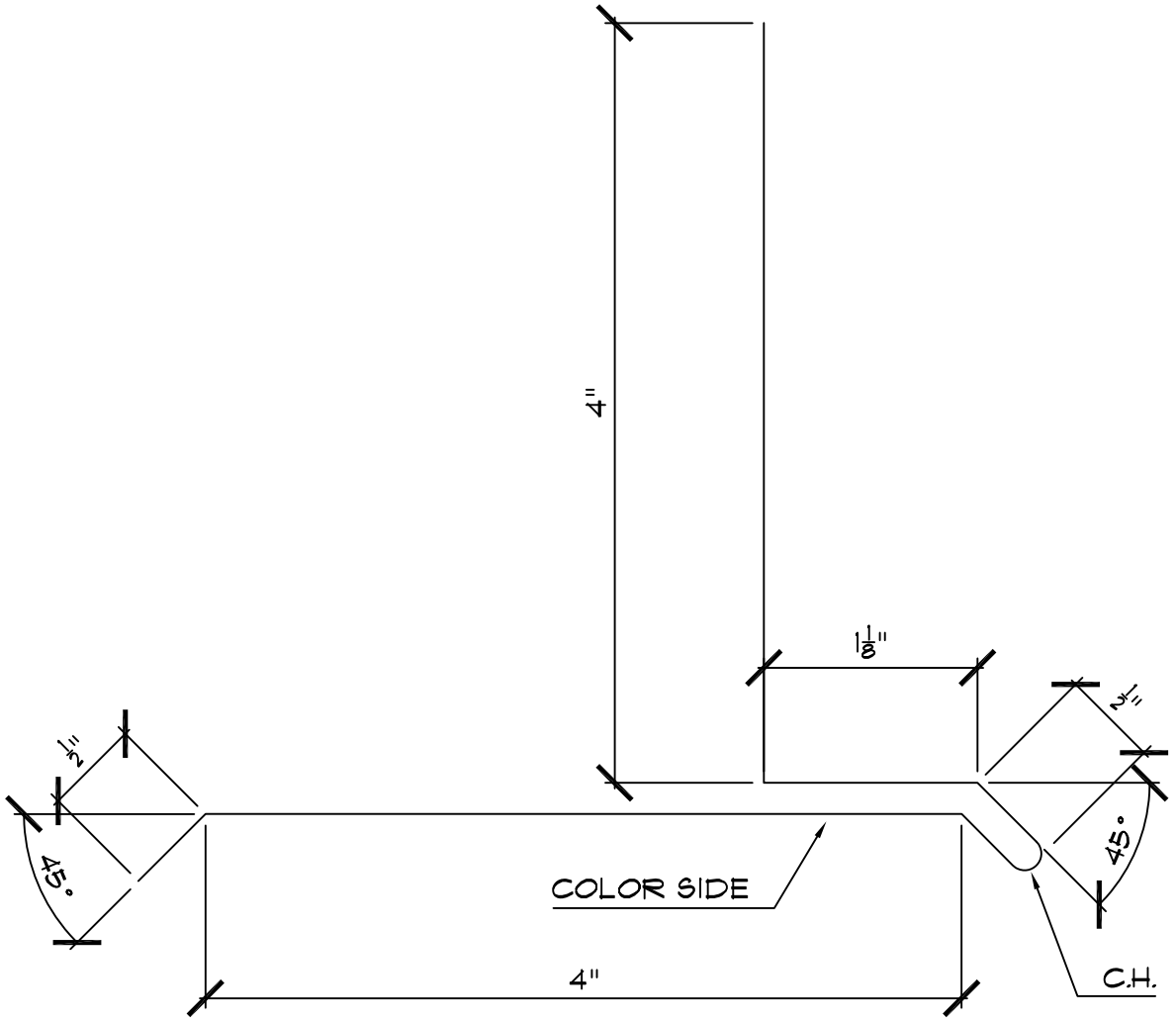

GAUGE:	STRETCH-OUT: 10 5/8"	PART #: HT093
COLOR:	# OF BREAKS: 6	PART NAME: HEADER TRIM
LENGTH: 10'-0"	QUANTITY:	

CUSTOMER:	DRAWN BY:	AEP SPAN
JOB NAME:	DATE:	
AEPS ORDER #:	ACCEPTED BY:	
	DATE:	

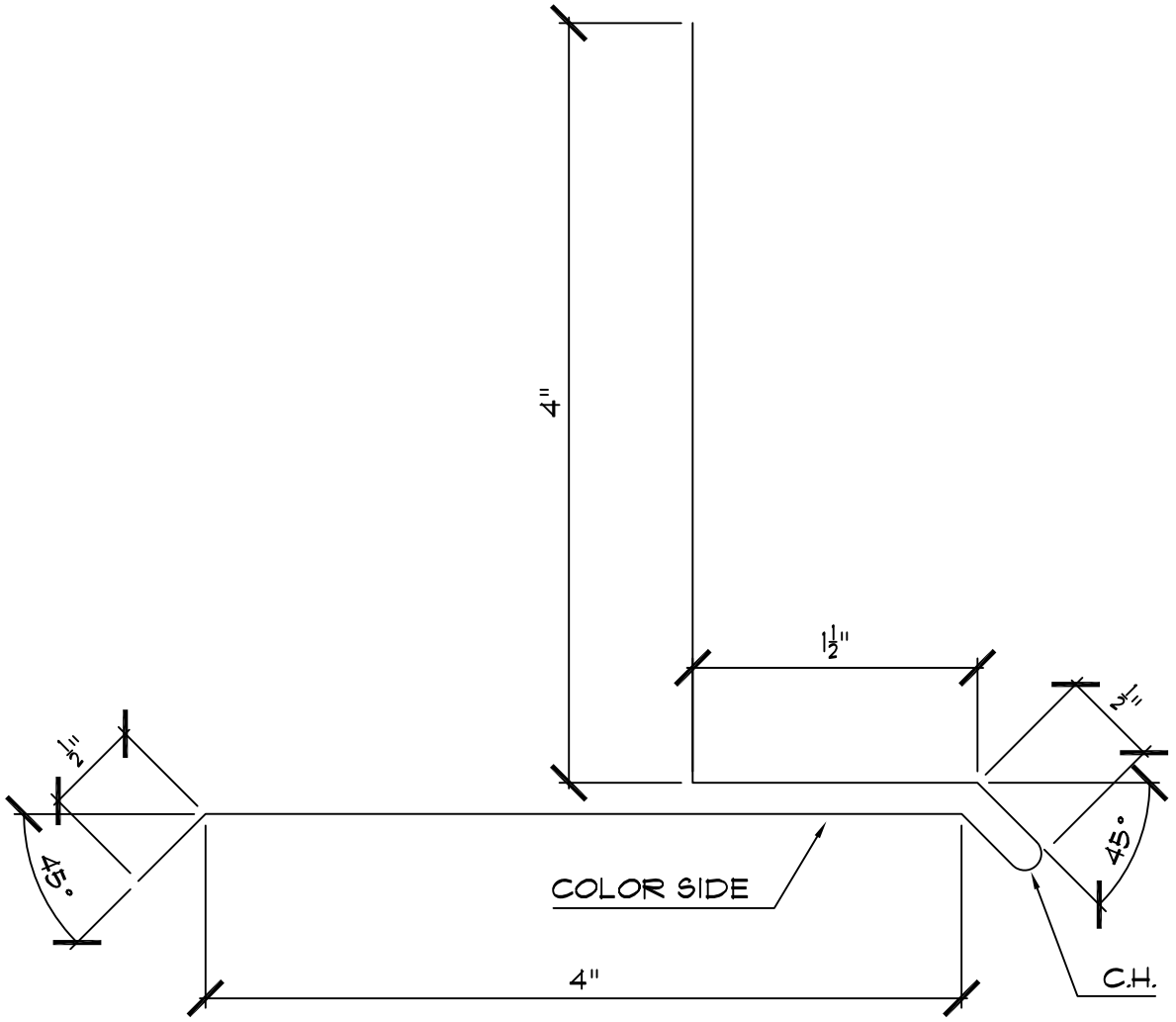

GAUGE:	STRETCH-OUT: 11"	PART #: HT095
COLOR:	# OF BREAKS: 6	PART NAME:
LENGTH: 10'-0"	QUANTITY:	HEADER TRIM

CUSTOMER:	DRAWN BY: BMG	AEP SPAN
JOB NAME:	DATE: 8/1/16	
AEPS ORDER #:	ACCEPTED BY:	
	DATE:	

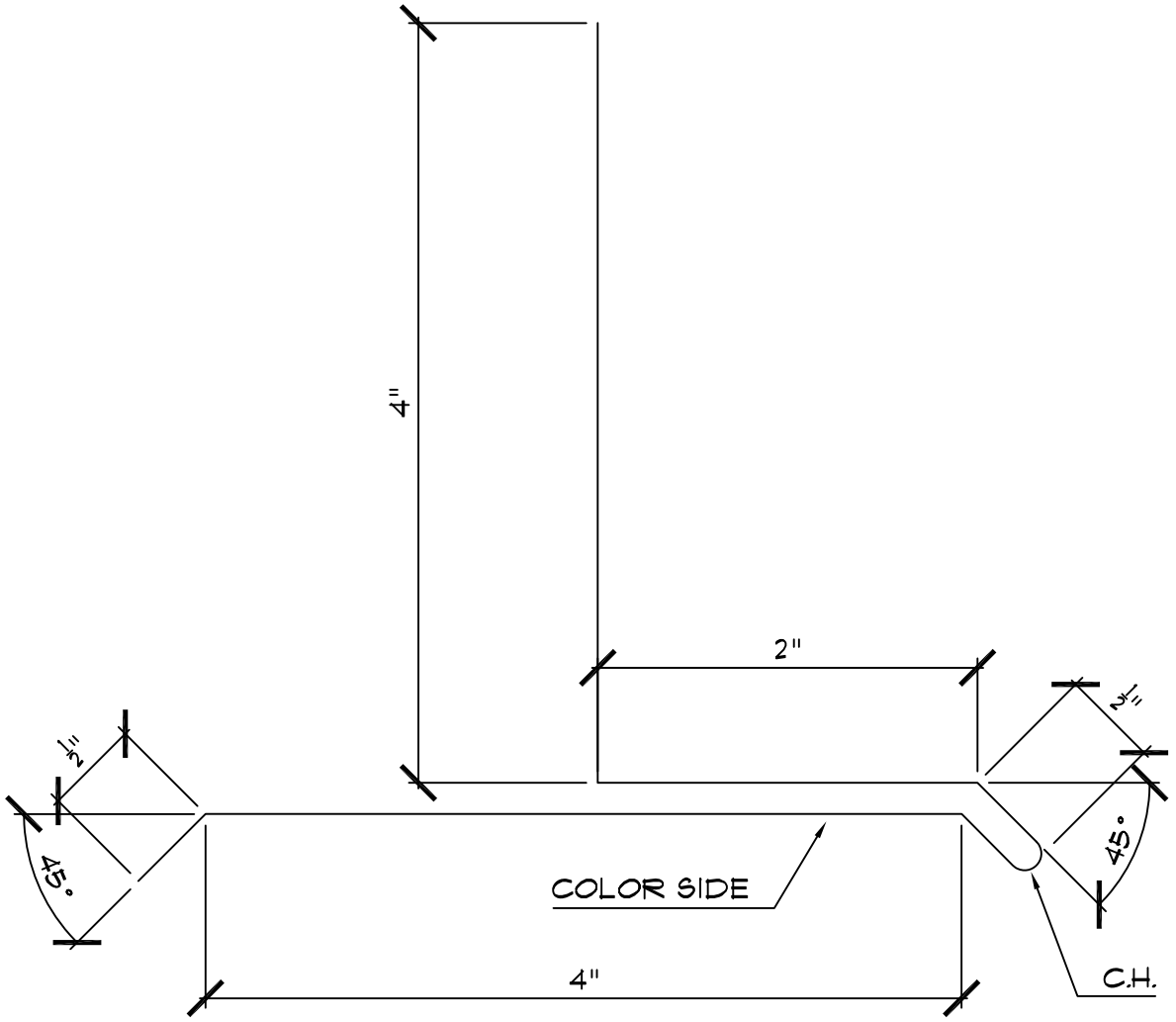

GAUGE:	STRETCH-OUT: 11 1/2"	PART #: HT100
COLOR:	# OF BREAKS: 6	PART NAME:
LENGTH: 10'-0"	QUANTITY:	HEADER TRIM

CUSTOMER:	DRAWN BY: BMG	AEP SPAN
JOB NAME:	DATE: 8/1/16	
AEPS ORDER #:	ACCEPTED BY:	
	DATE:	

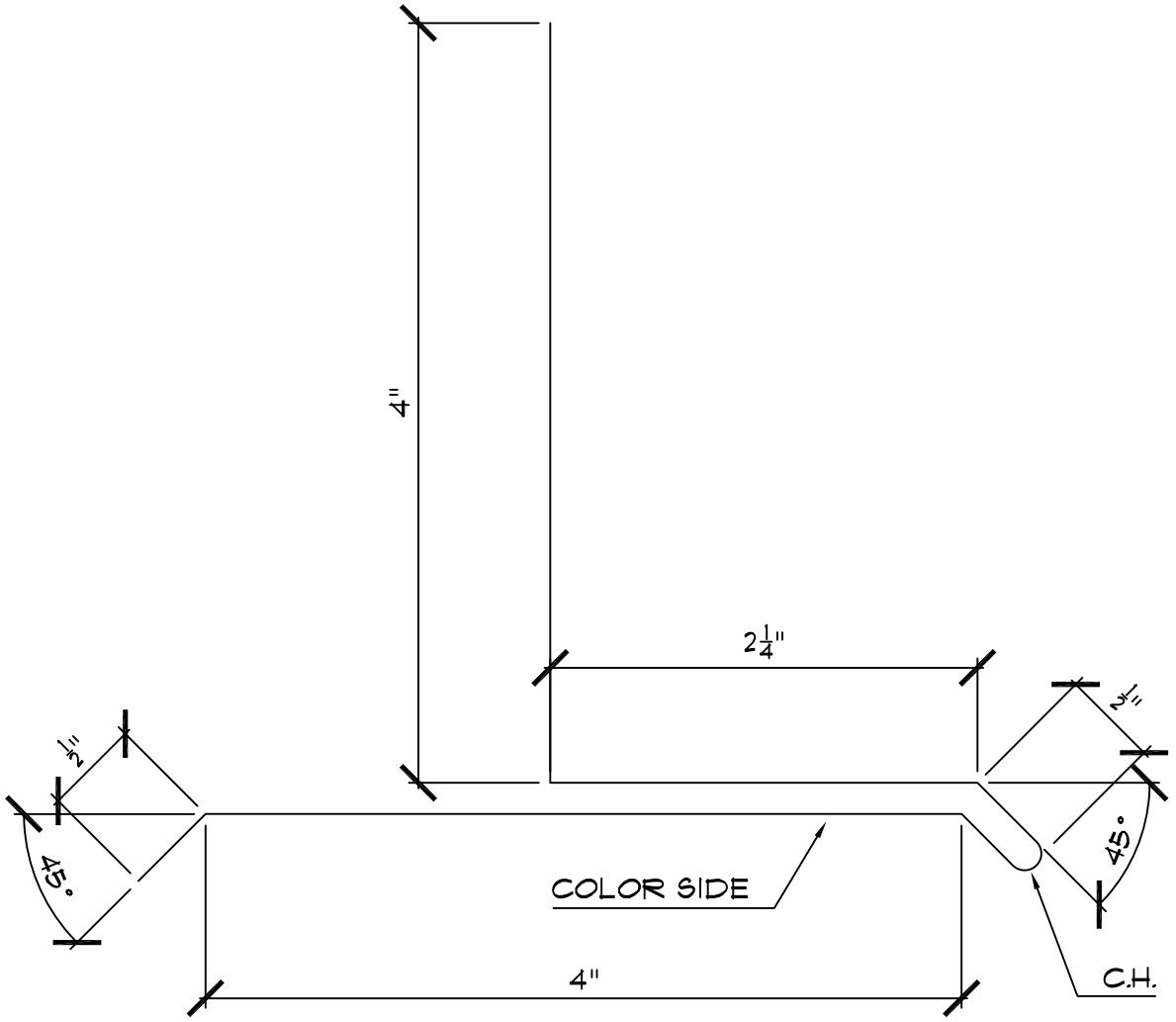

GAUGE:	STRETCH-OUT: 11 3/4"	PART #: HT101
COLOR:	# OF BREAKS: 6	PART NAME:
LENGTH: 10'-0"	QUANTITY:	HEADER TRIM

CUSTOMER:	DRAWN BY: BMG	AEP SPAN
JOB NAME:	DATE: 8/1/16	
AEPS ORDER #:	ACCEPTED BY:	
	DATE:	

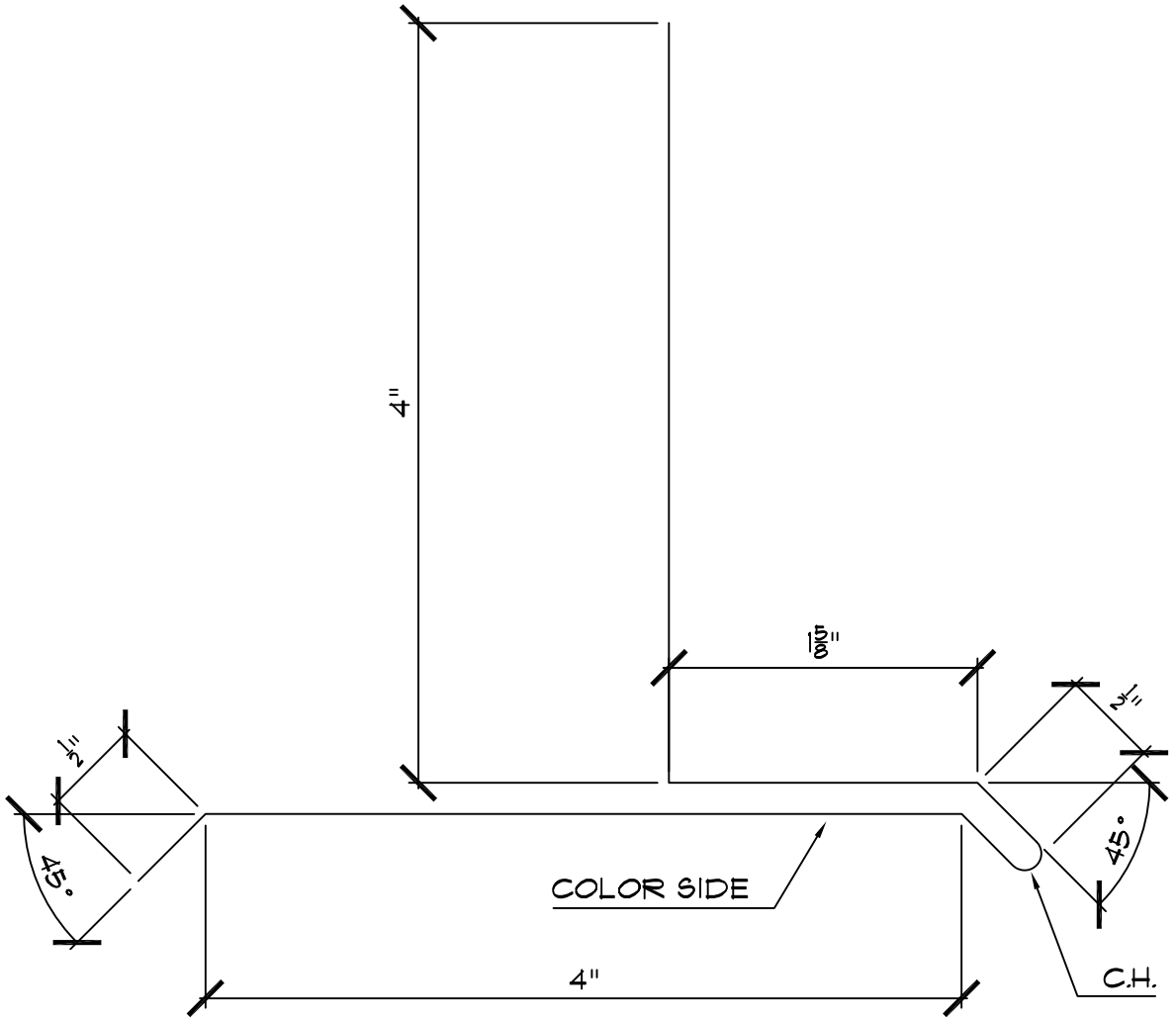

GAUGE:	STRETCH-OUT: 11 1/8"	PART #: HT102
COLOR:	# OF BREAKS: 6	PART NAME:
LENGTH: 10'-0"	QUANTITY:	HEADER TRIM

CUSTOMER:	DRAWN BY: BMG	AEP SPAN
JOB NAME:	DATE: 8/1/16	
AEPS ORDER #:	ACCEPTED BY:	
	DATE:	

Return to Menu

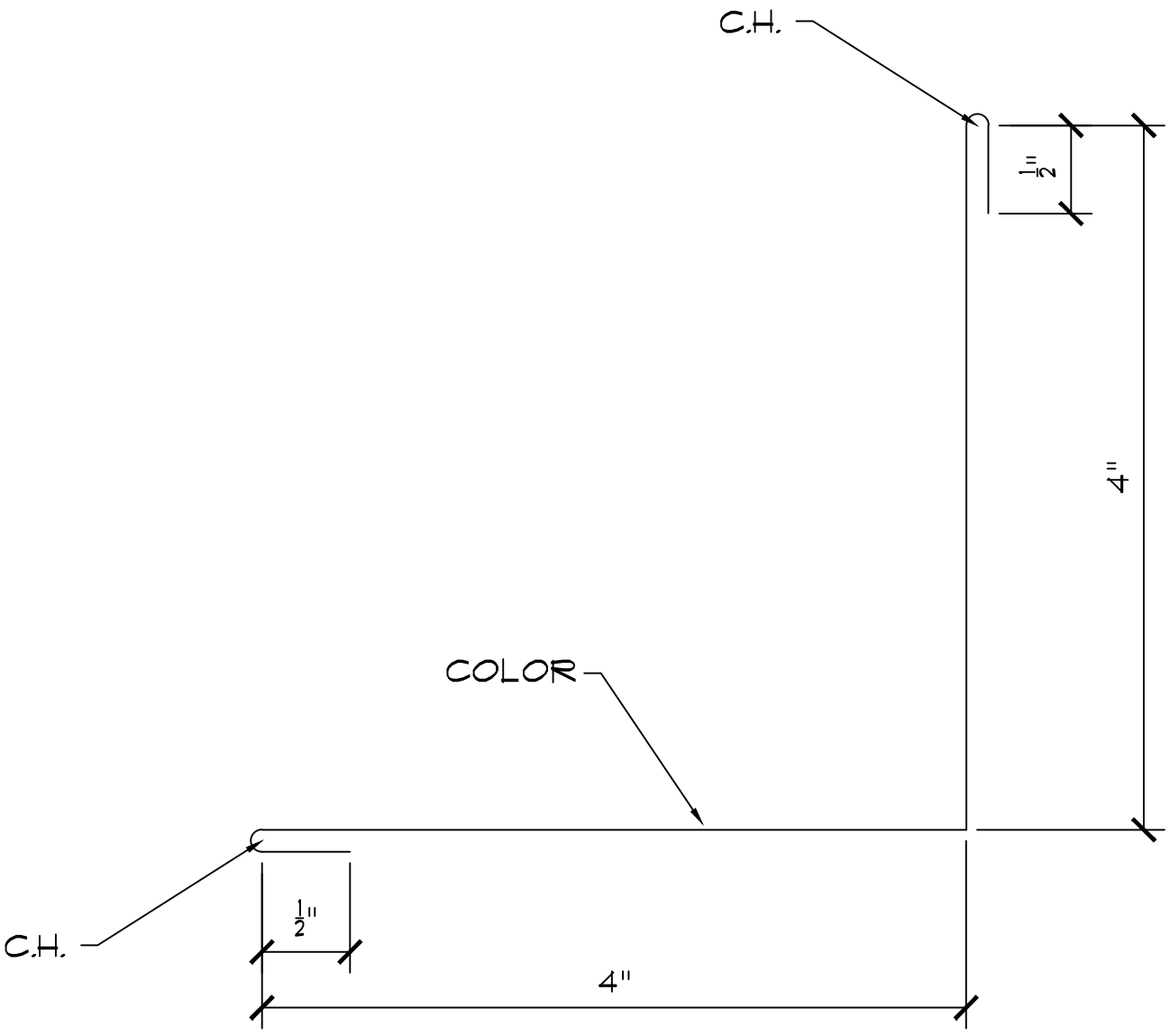

GAUGE:	STRETCH-OUT: 9"	PART #: 1C093
COLOR:	# OF BREAKS: 5	PART NAME:
LENGTH: 10'-0"	QUANTITY:	INSIDE CORNER TRIM

CUSTOMER:	DRAWN BY:	AEP SPAN
JOB NAME:	DATE:	
AEPS ORDER #:	ACCEPTED BY:	
	DATE:	

Return to Menu

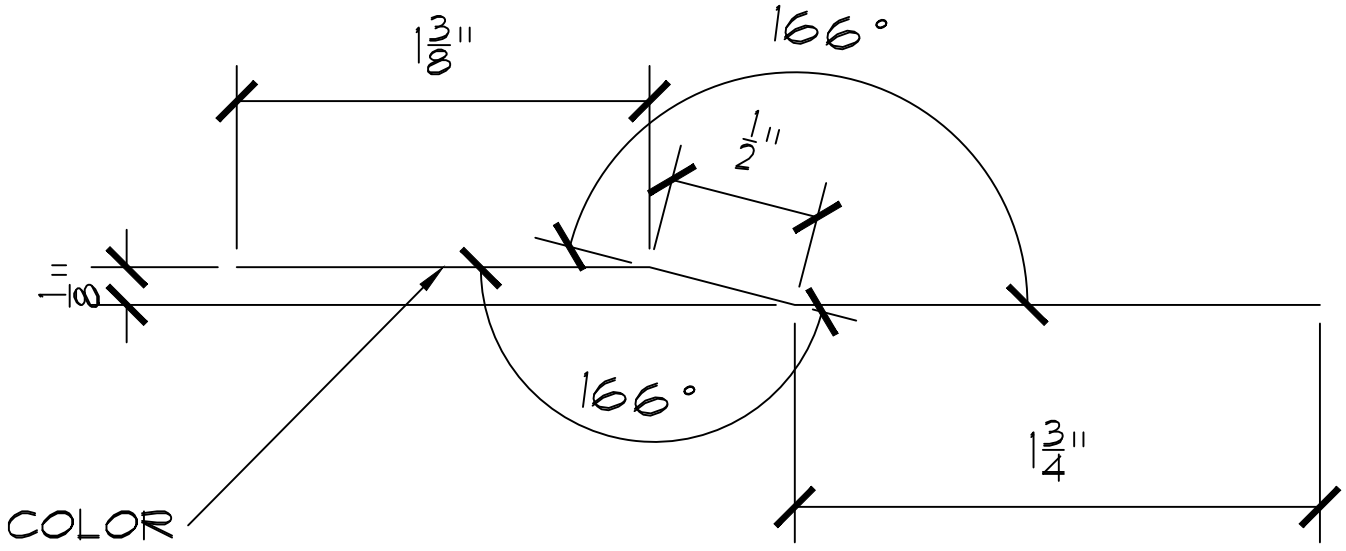

GAUGE:	STRETCH-OUT: 3 5/8"	PART #: JC095
COLOR:	# OF BREAKS: 2	PART NAME:
LENGTH: 10'-0"	QUANTITY:	JOGGLE CLEAT

CUSTOMER:	DRAWN BY:	AEP SPAN
JOB NAME:	DATE:	
AEPS ORDER #:	ACCEPTED BY:	
	DATE:	

Return to Menu

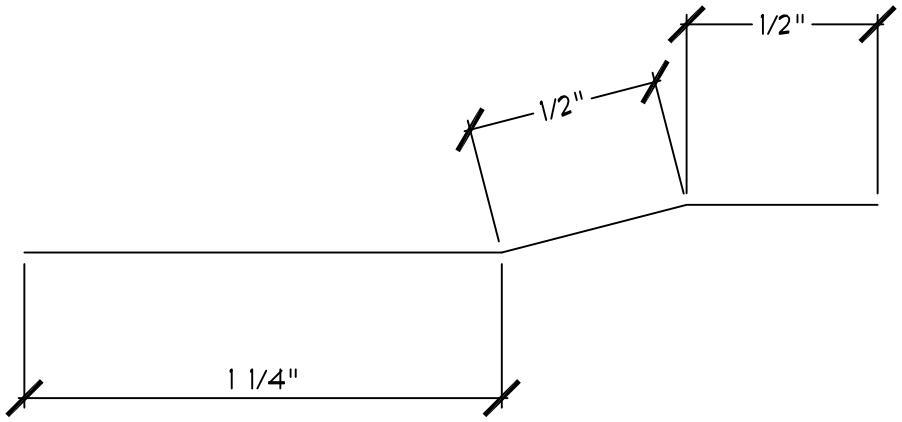

GAUGE:	STRETCH–OUT: 2 1/4"	PART #: JC096
COLOR:	# OF BREAKS: 2	PART NAME:
LENGTH: 10'-0"	QUANTITY:	STARTER CLEAT

CUSTOMER:	DRAWN BY: BMG	AEP SPAN
JOB NAME:	DATE: 9/1516	
AEPS ORDER #:	ACCEPTED BY:	
	DATE:	

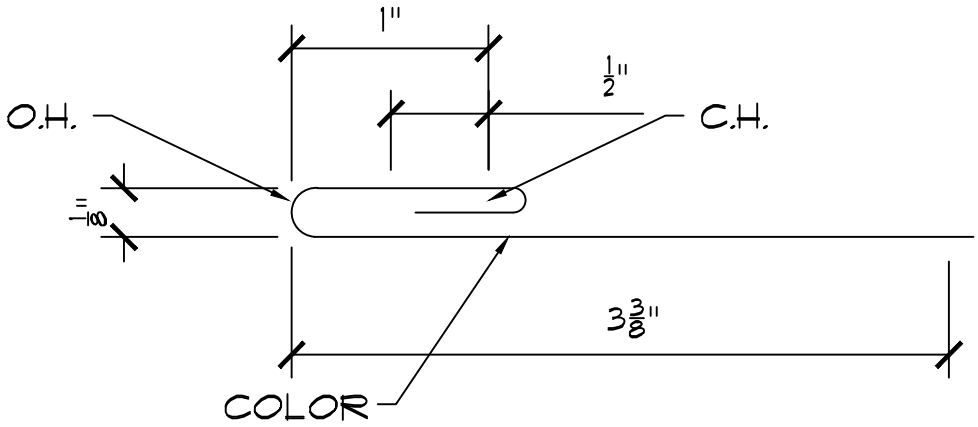

GAUGE:	STRETCH-OUT: 5"	PART #: JS096
COLOR:	# OF BREAKS: 4	PART NAME:
LENGTH: 10'-0"	QUANTITY:	"J" STARTER

CUSTOMER:	DRAWN BY:	AEP SPAN
JOB NAME:	DATE:	
AEPS ORDER #:	ACCEPTED BY:	
	DATE:	

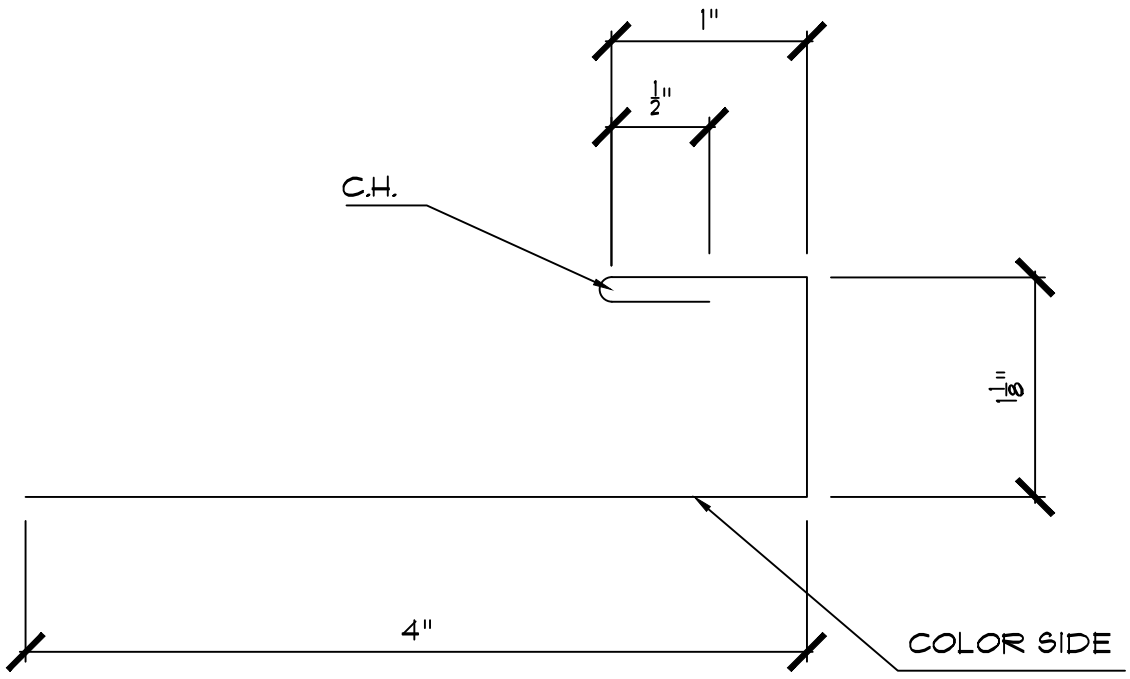

GAUGE:	STRETCH-OUT: 6 5/8"	PART #: JT097
COLOR:	# OF BREAKS: 4	PART NAME:
LENGTH: 10'-0"	QUANTITY:	"J" TRIM

CUSTOMER:	DRAWN BY:	AEP SPAN
JOB NAME:	DATE:	
AEPS ORDER #:	ACCEPTED BY:	
	DATE:	

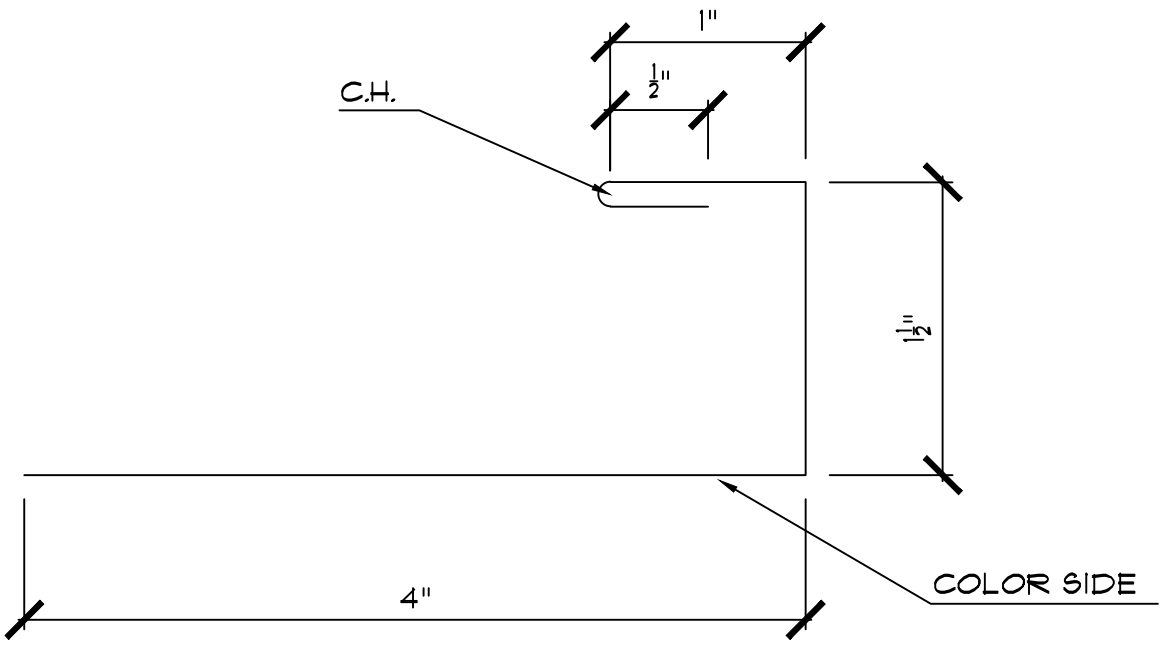

GAUGE:	STRETCH-OUT: 7"	PART #: JT098
COLOR:	# OF BREAKS: 4	PART NAME:
LENGTH: 10'-0"	QUANTITY:	"J" TRIM

CUSTOMER:	DRAWN BY:	AEP SPAN
JOB NAME:	DATE:	
AEPS ORDER #:	ACCEPTED BY:	
	DATE:	

Return to Menu

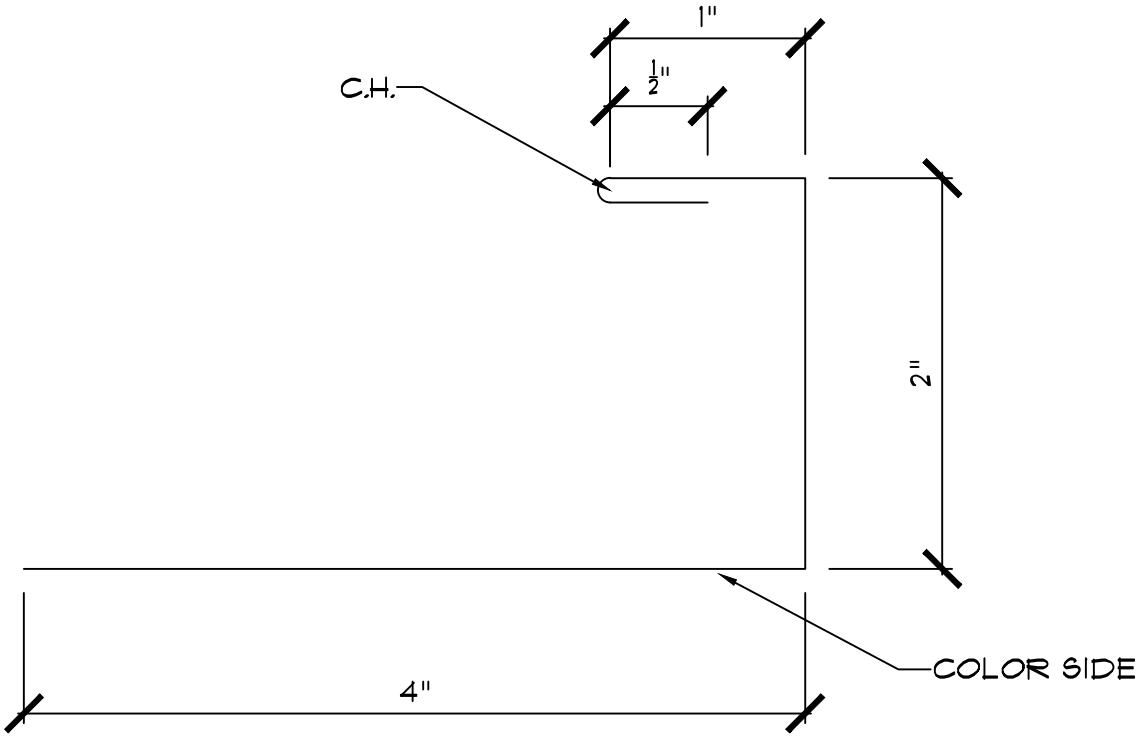

GAUGE:	STRETCH-OUT: 7 1/2"	PART #: JT099
COLOR:	# OF BREAKS: 4	PART NAME:
LENGTH: 10'-0"	QUANTITY:	"J" TRIM

CUSTOMER:	DRAWN BY:	AEP SPAN
JOB NAME:	DATE:	
AEPS ORDER #:	ACCEPTED BY:	
	DATE:	

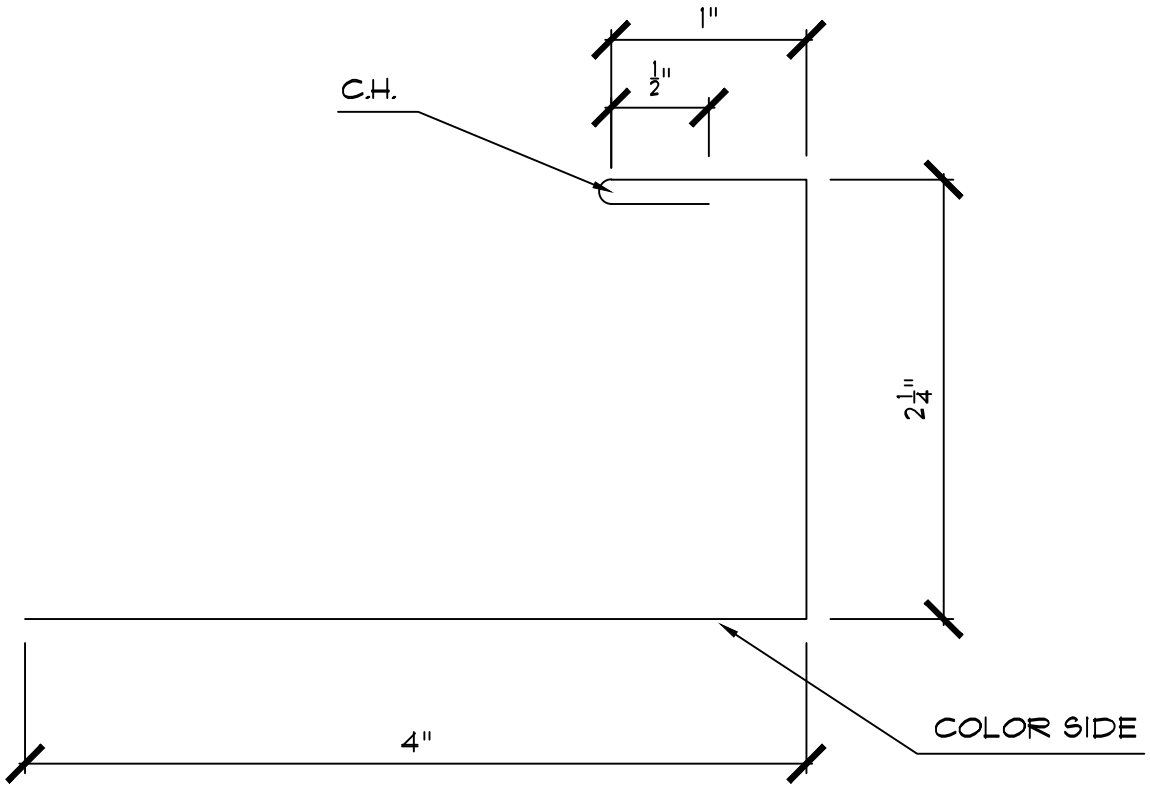

GAUGE:	STRETCH-OUT: 7 3/4"	PART #: JT100
COLOR:	# OF BREAKS: 4	PART NAME:
LENGTH: 10'-0"	QUANTITY:	"J" TRIM

CUSTOMER:	DRAWN BY:	AEP SPAN
JOB NAME:	DATE:	
AEPS ORDER #:	ACCEPTED BY:	
	DATE:	

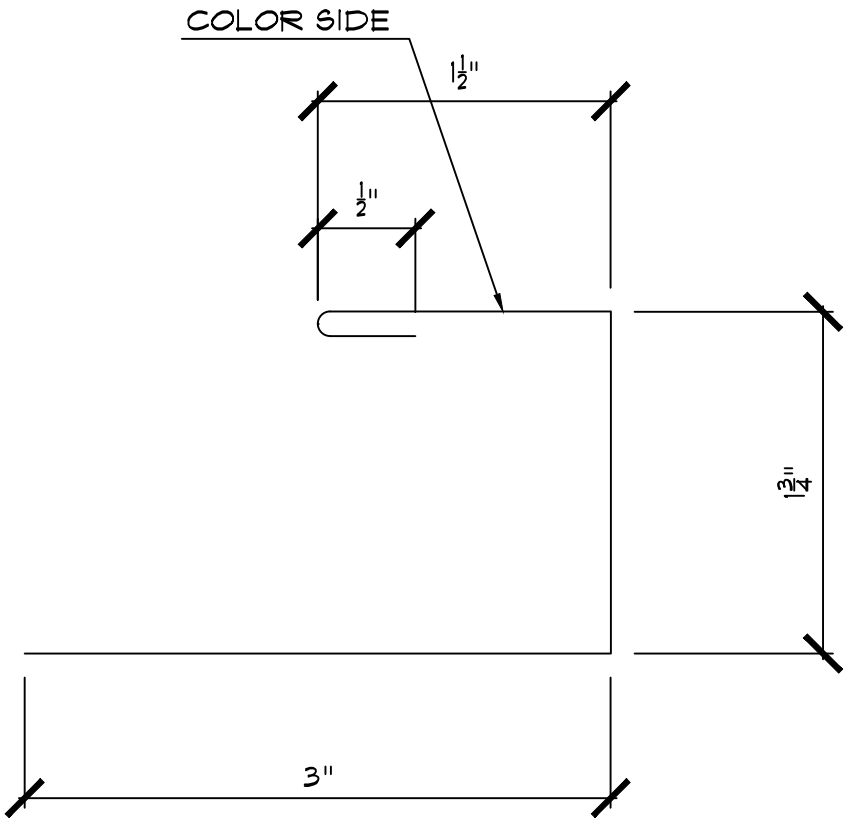

GAUGE:	STRETCH–OUT: 6 3/4"	PART #: JT107
COLOR:	# OF BREAKS: 4	PART NAME: C-METAL
LENGTH: 10'-0"	QUANTITY:	

CUSTOMER:	DRAWN BY:	AEP SPAN
JOB NAME:	DATE:	
AEPS ORDER #:	ACCEPTED BY:	
	DATE:	

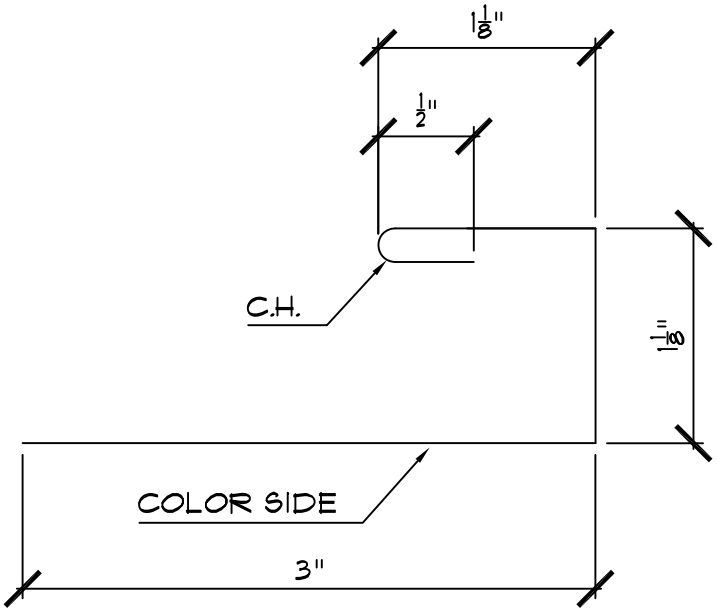

GAUGE:	STRETCH-OUT: 5 3/4"	PART #: JT108
COLOR:	# OF BREAKS: 4	PART NAME:
LENGTH: 10'-0"	QUANTITY:	J TRIM

CUSTOMER:	DRAWN BY: BMG	AEP SPAN
JOB NAME:	DATE: 8/01/16	
AEPS ORDER #:	ACCEPTED BY:	
	DATE:	

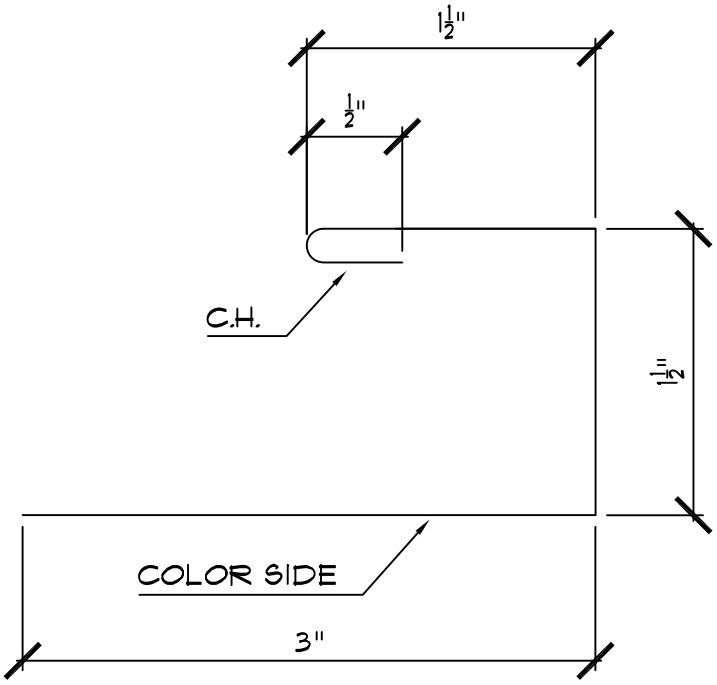

GAUGE:	STRETCH–OUT: 6 1/2"	PART #: JT109
COLOR:	# OF BREAKS: 4	PART NAME: J TRIM
LENGTH: 10'-0"	QUANTITY:	

CUSTOMER:	DRAWN BY: BMG	AEP SPAN
JOB NAME:	DATE: 8/01/16	
AEPS ORDER #:	ACCEPTED BY:	
	DATE:	

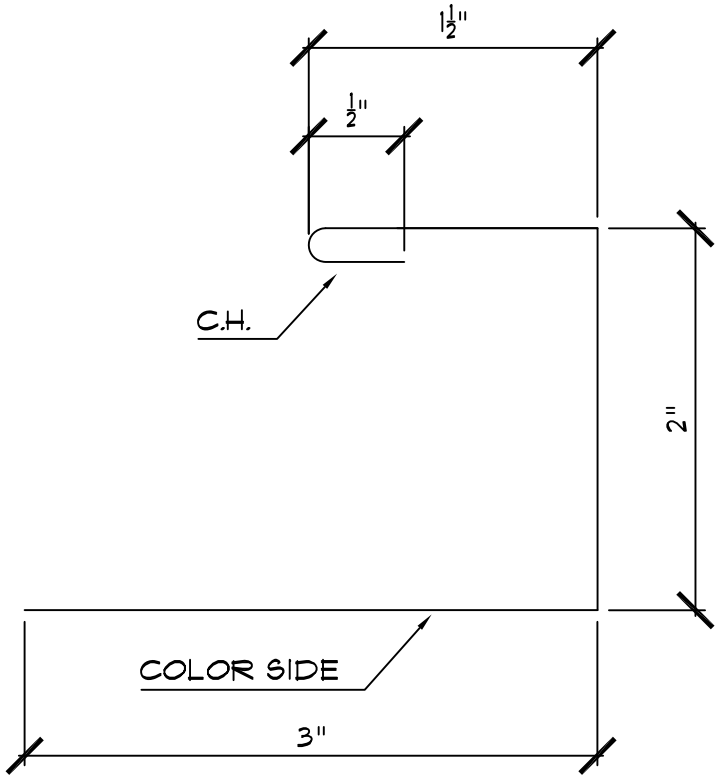

GAUGE:	STRETCH-OUT: 7"	PART #: JT110
COLOR:	# OF BREAKS: 4	PART NAME: J TRIM
LENGTH: 10'-0"	QUANTITY:	

CUSTOMER:	DRAWN BY: BMG	AEP SPAN
JOB NAME:	DATE: 8/01/16	
AEPS ORDER #:	ACCEPTED BY:	
	DATE:	

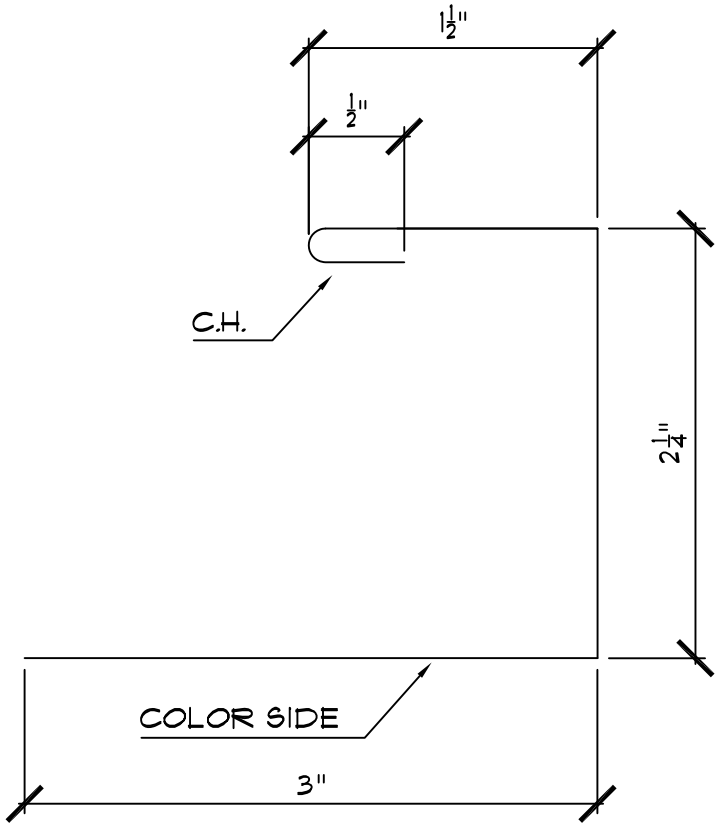

GAUGE:	STRETCH-OUT: 7 1/4"	PART #: JT111
COLOR:	# OF BREAKS: 4	PART NAME: J TRIM
LENGTH: 10'-0"	QUANTITY:	

CUSTOMER:	DRAWN BY: BMG	AEP SPAN
JOB NAME:	DATE: 8/01/16	
AEPS ORDER #:	ACCEPTED BY:	
	DATE:	

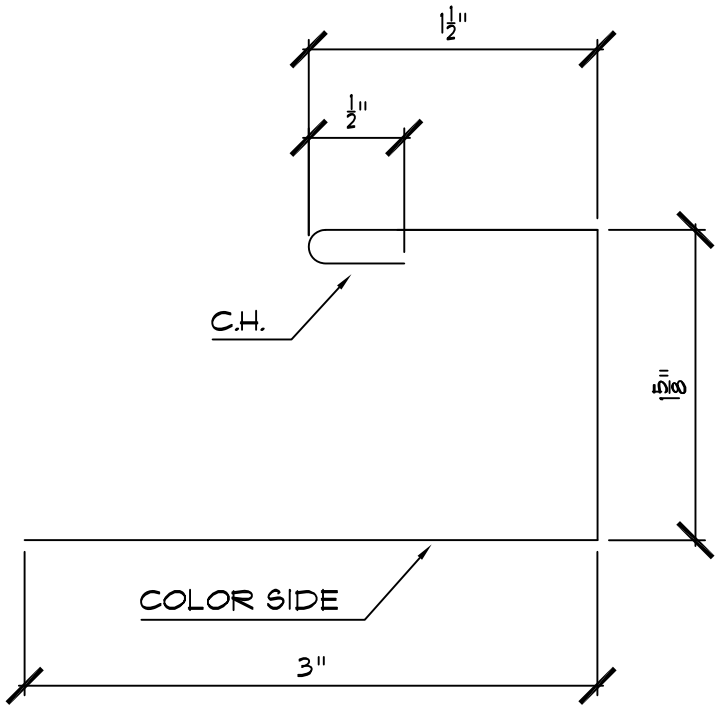

GAUGE:	STRETCH–OUT: 6 5/8"	PART #: JT112
COLOR:	# OF BREAKS: 4	PART NAME:
LENGTH: 10'-0"	QUANTITY:	J TRIM

CUSTOMER:	DRAWN BY: BMG	AEP SPAN
JOB NAME:	DATE: 8/01/16	
AEPS ORDER #:	ACCEPTED BY:	
	DATE:	

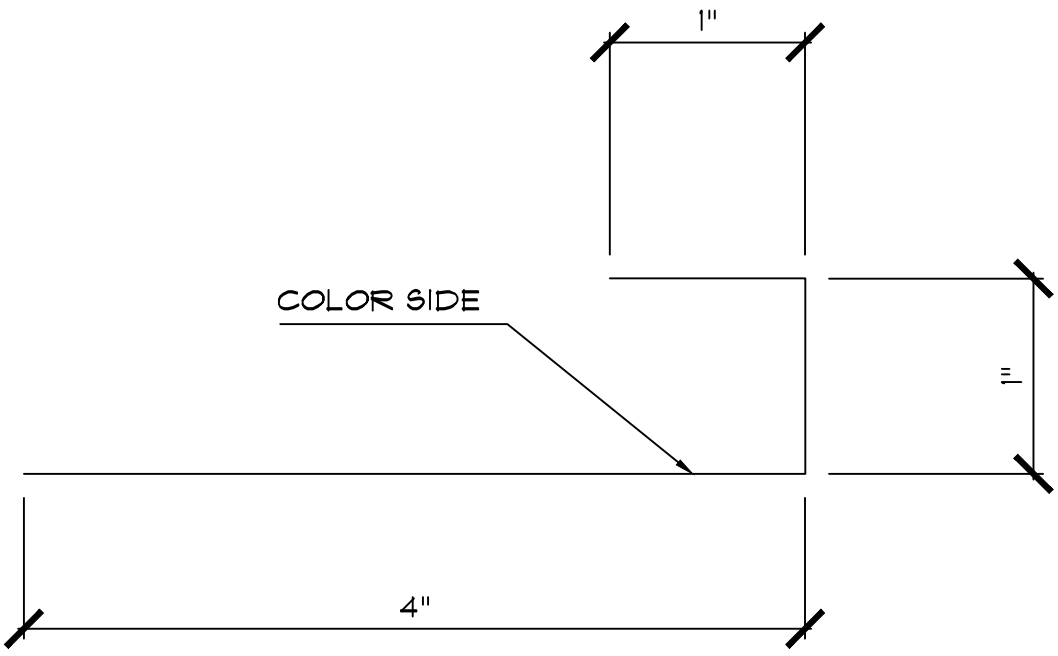

GAUGE:	STRETCH-OUT: 6"	PART #: JT102
COLOR:	# OF BREAKS: 2	PART NAME:
LENGTH: 10'-0"	QUANTITY:	"J" TRIM

CUSTOMER:	DRAWN BY:	AEP SPAN
JOB NAME:	DATE:	
AEPS ORDER #:	ACCEPTED BY:	
	DATE:	

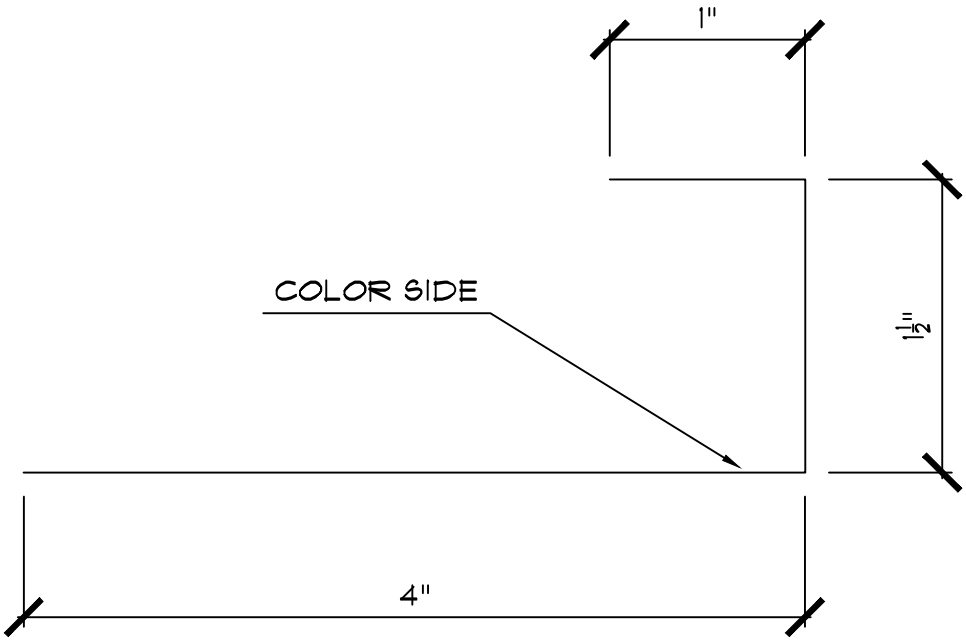

GAUGE:	STRETCH-OUT: 6 1/2"	PART #: JT103
COLOR:	# OF BREAKS: 2	PART NAME:
LENGTH: 10'-0"	QUANTITY:	"J" TRIM

CUSTOMER:	DRAWN BY:	AEP SPAN
JOB NAME:	DATE:	
AEPS ORDER #:	ACCEPTED BY:	
	DATE:	

Return to Menu

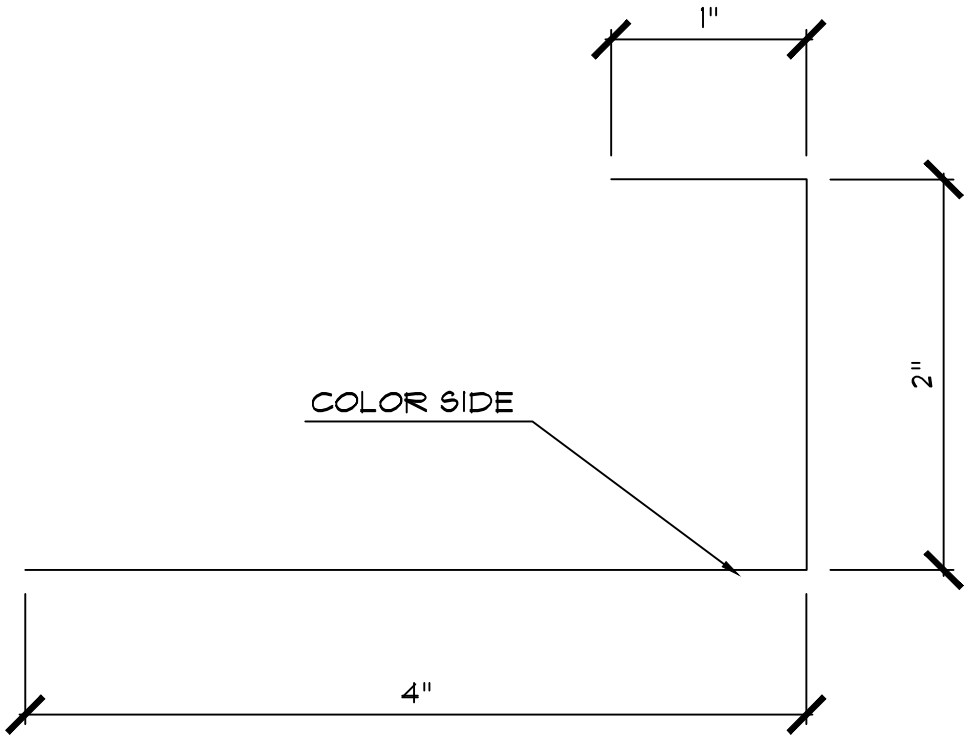

GAUGE:	STRETCH-OUT: 7"	PART #: JT104
COLOR:	# OF BREAKS: 2	PART NAME:
LENGTH: 10'-0"	QUANTITY:	"J" TRIM

CUSTOMER:	DRAWN BY:	AEP SPAN
JOB NAME:	DATE:	
AEPS ORDER #:	ACCEPTED BY:	
	DATE:	

Return to Menu

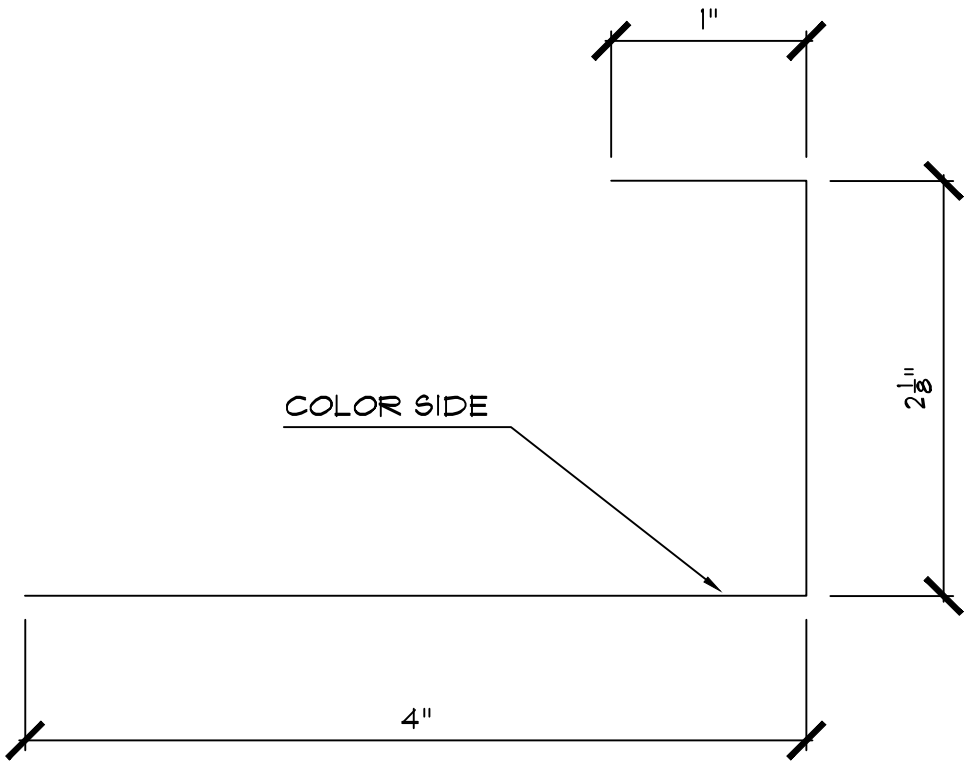

GAUGE:	STRETCH-OUT: 7 1/8"	PART #: JT105
COLOR:	# OF BREAKS: 2	PART NAME:
LENGTH: 10'-0"	QUANTITY:	"J" TRIM

CUSTOMER:	DRAWN BY:	AEP SPAN
JOB NAME:	DATE:	
AEPS ORDER #:	ACCEPTED BY:	
	DATE:	

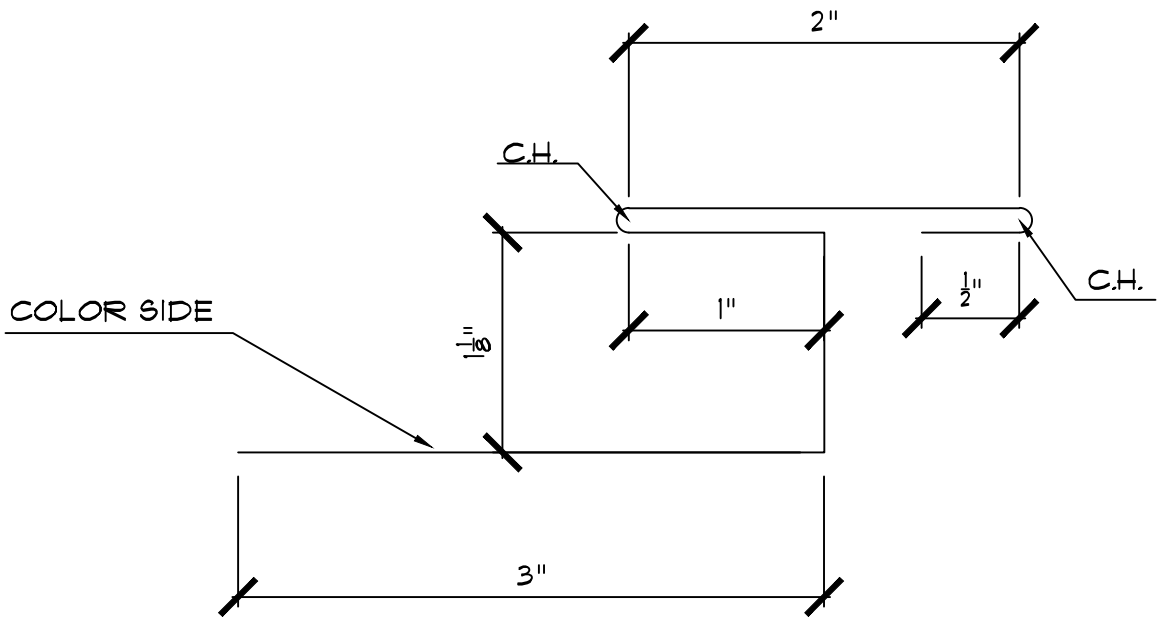

GAUGE:	STRETCH-OUT: 7 5/8"	PART #: MT107
COLOR:	# OF BREAKS: 6	PART NAME:
LENGTH: 10'-0"	QUANTITY:	MITER TRIM

CUSTOMER:	DRAWN BY:	AEP SPAN
JOB NAME:	DATE:	
AEPS ORDER #:	ACCEPTED BY:	
	DATE:	

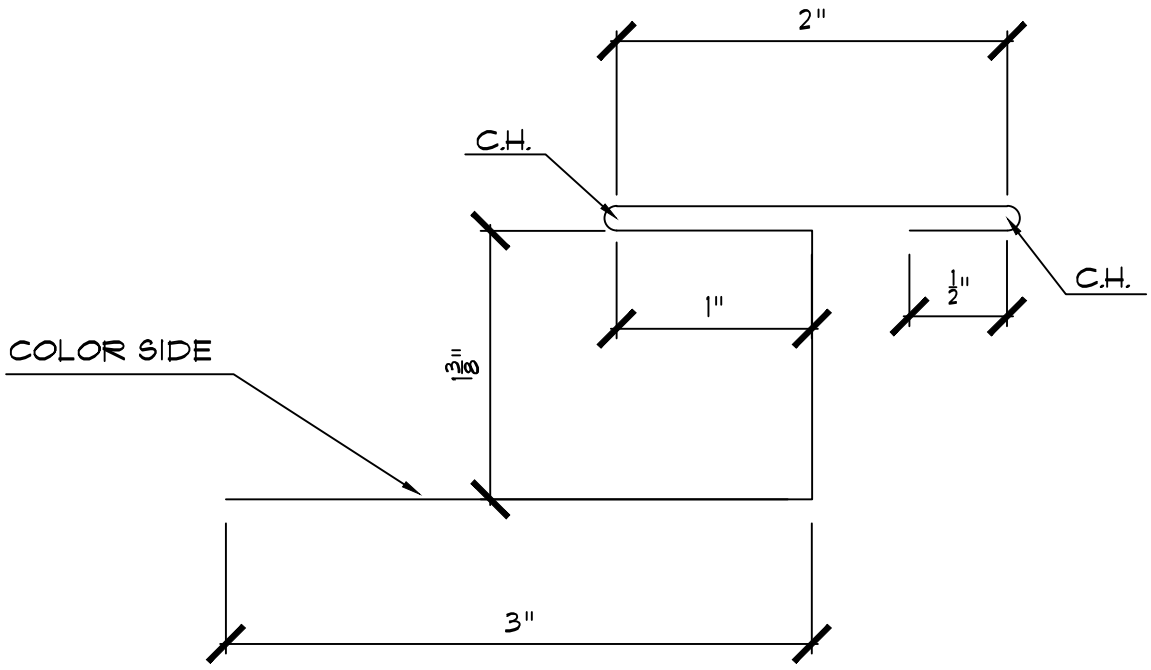

GAUGE:	STRETCH-OUT: 7 7/8"	PART #: MT108
COLOR:	# OF BREAKS: 6	PART NAME:
LENGTH: 10'-0"	QUANTITY:	MITER TRIM

CUSTOMER:	DRAWN BY:	AEP SPAN
JOB NAME:	DATE:	
AEPS ORDER #:	ACCEPTED BY:	
	DATE:	

Return to Menu

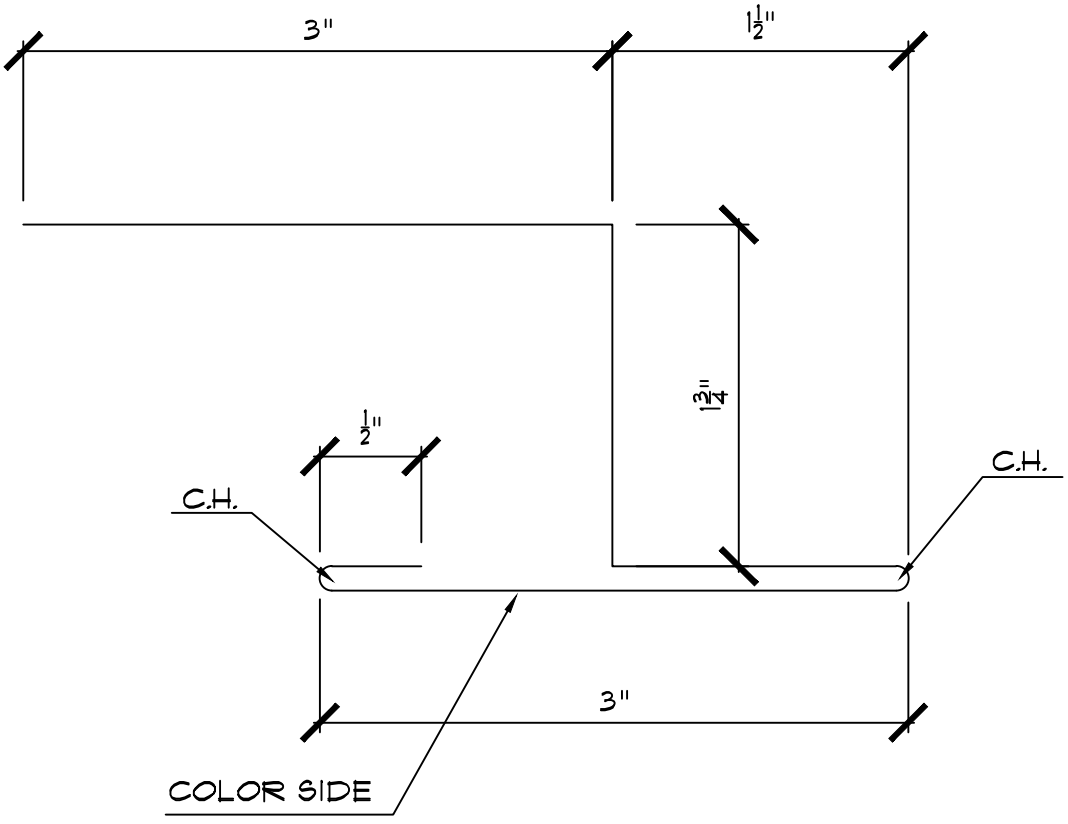

GAUGE:	STRETCH–OUT: 9 3/4"	PART #: MT109
COLOR:	# OF BREAKS: 6	PART NAME:
LENGTH: 10'-0"	QUANTITY:	END SPLICE

CUSTOMER:	DRAWN BY:	AEP SPAN
JOB NAME:	DATE:	
AEPS ORDER #:	ACCEPTED BY:	
	DATE:	

Return to Menu

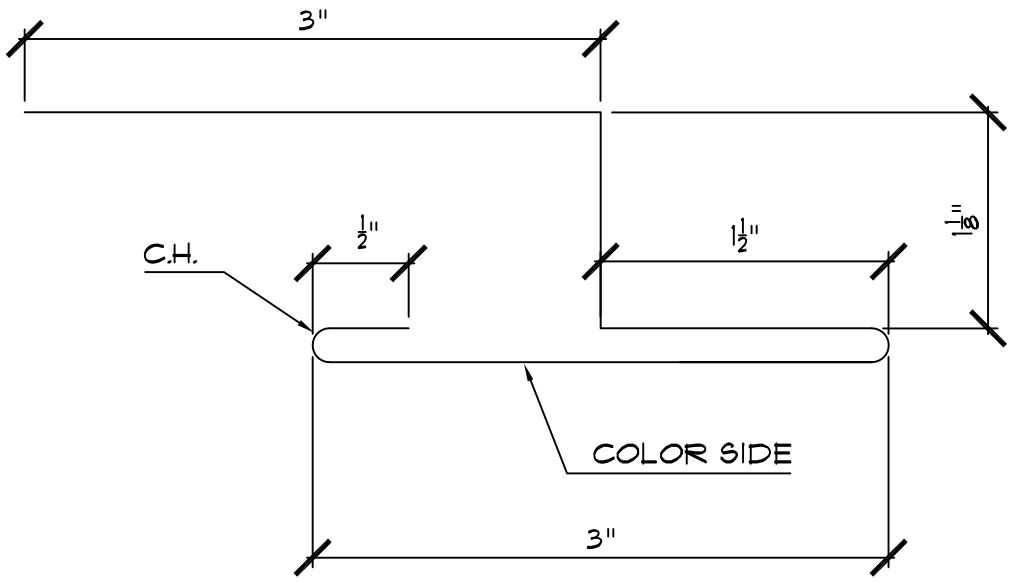

GAUGE:	STRETCH–OUT: 9 1/8"	PART #: MT110
COLOR:	# OF BREAKS: 6	PART NAME:
LENGTH: 10'-0"	QUANTITY:	END SPLICE

CUSTOMER:	DRAWN BY: BMG	AEP SPAN
JOB NAME:	DATE: 11/30/16	
AEPS ORDER #:	ACCEPTED BY:	
	DATE:	

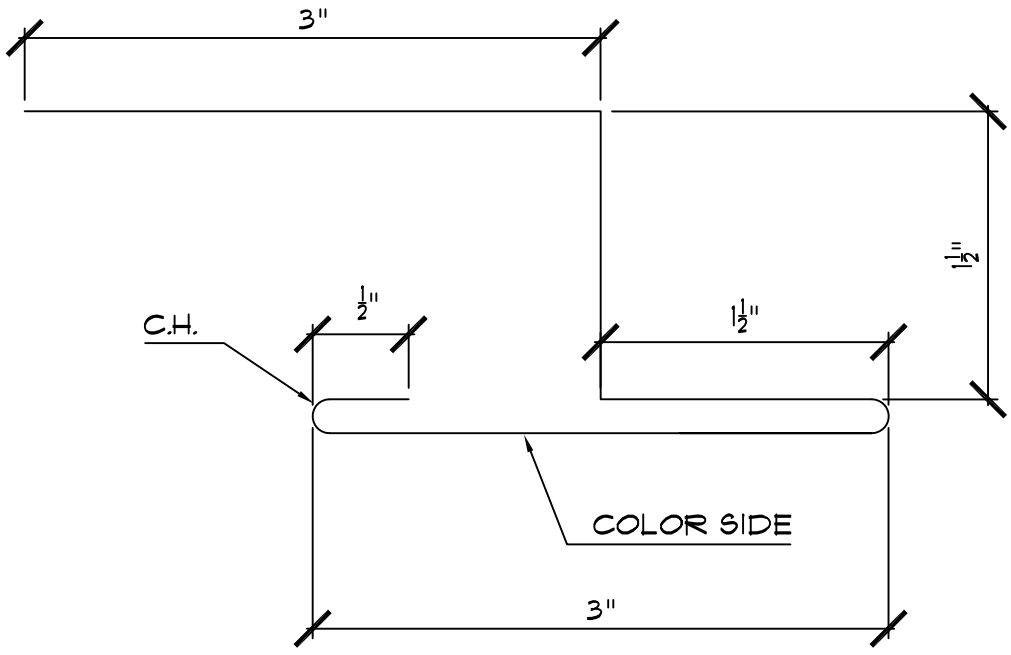

GAUGE:	STRETCH–OUT: 9 1/2"	PART #: MT111
COLOR:	# OF BREAKS: 6	PART NAME:
LENGTH: 10'-0"	QUANTITY:	END SPLICE

CUSTOMER:	DRAWN BY: BMG	AEP SPAN
JOB NAME:	DATE: 12/01/16	
AEPS ORDER #:	ACCEPTED BY:	
	DATE:	

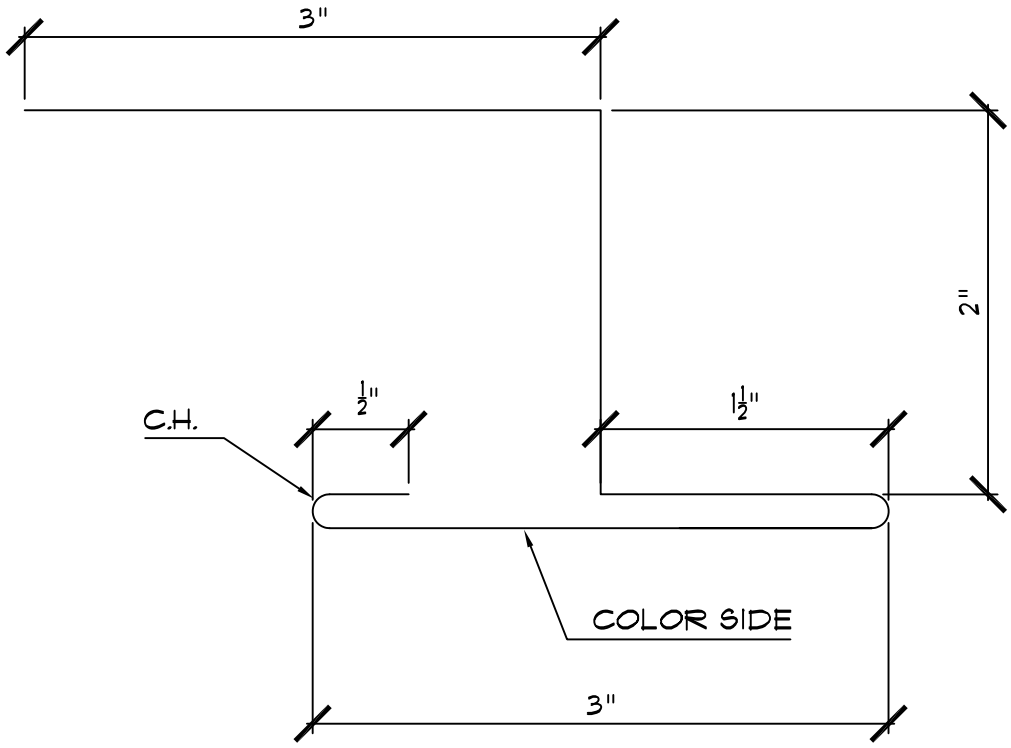

GAUGE:	STRETCH–OUT: 10"	PART #: MT112
COLOR:	# OF BREAKS: 6	PART NAME:
LENGTH: 10'-0"	QUANTITY:	END SPLICE

CUSTOMER:	DRAWN BY: BMG	AEP SPAN
JOB NAME:	DATE: 12/01/16	
AEPS ORDER #:	ACCEPTED BY:	
	DATE:	

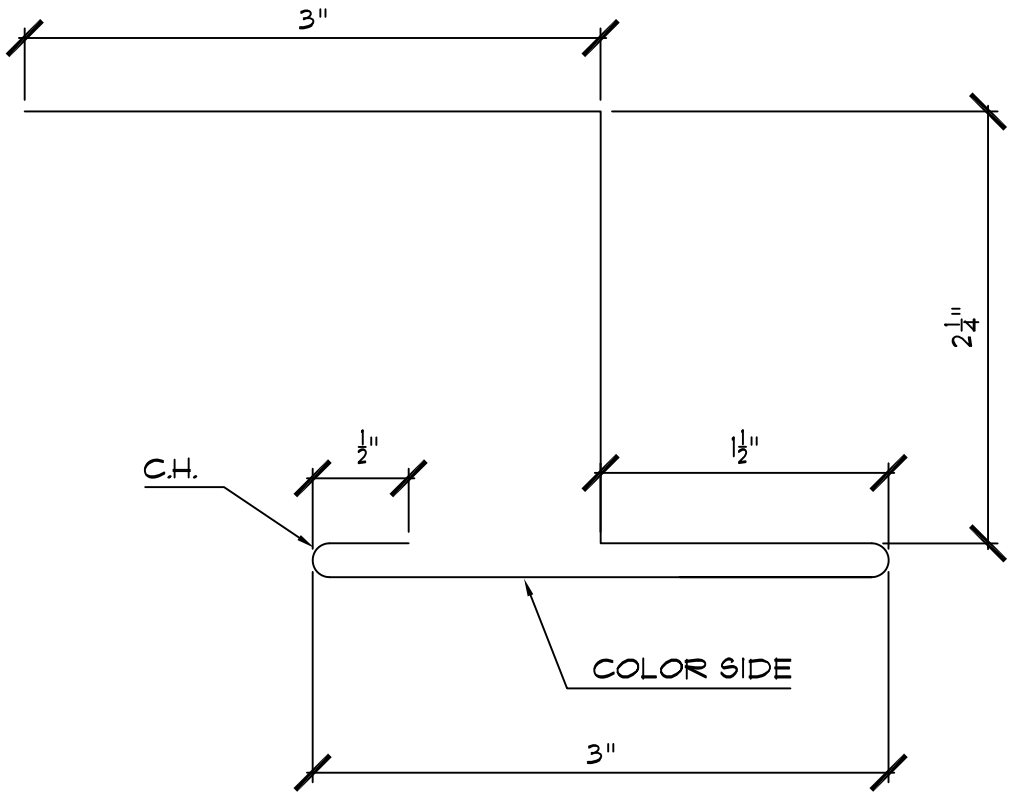

GAUGE:	STRETCH–OUT: 10 1/4"	PART #: MT113
COLOR:	# OF BREAKS: 6	PART NAME:
LENGTH: 10'-0"	QUANTITY:	END SPLICE

CUSTOMER:	DRAWN BY: BMG	AEP SPAN
JOB NAME:	DATE: 12/01/16	
AEPS ORDER #:	ACCEPTED BY:	
	DATE:	

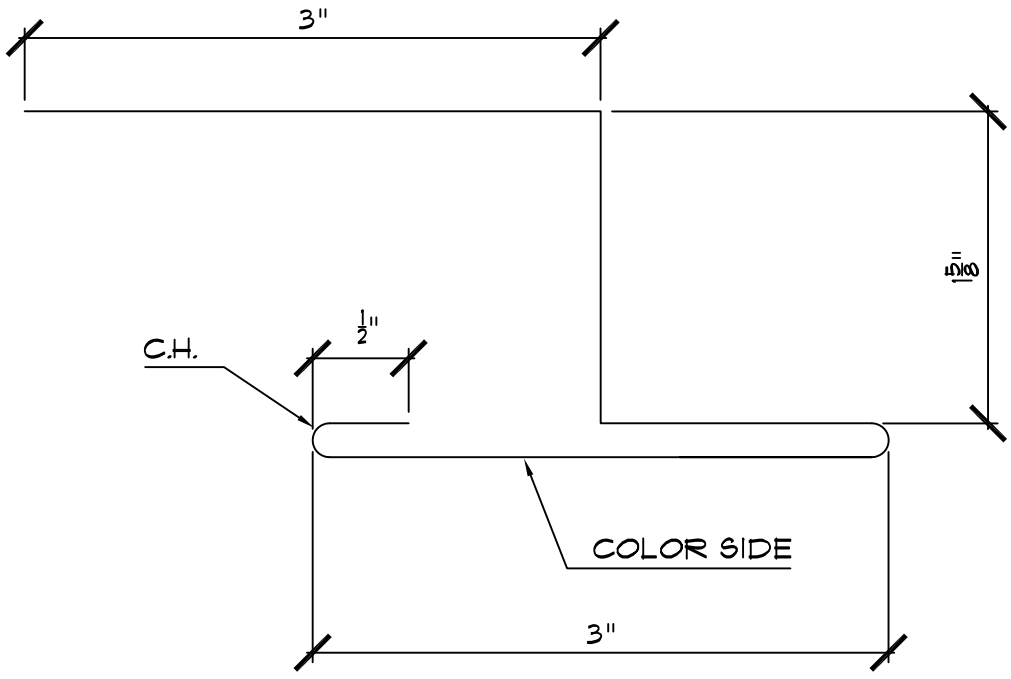

GAUGE:	STRETCH-OUT: 8 1/8"	PART #: MT114
COLOR:	# OF BREAKS: 6	PART NAME:
LENGTH: 10'-0"	QUANTITY:	END SPLICE

CUSTOMER:	DRAWN BY: BMG	AEP SPAN
JOB NAME:	DATE: 8/01/16	
AEPS ORDER #:	ACCEPTED BY:	
	DATE:	

Return to Menu

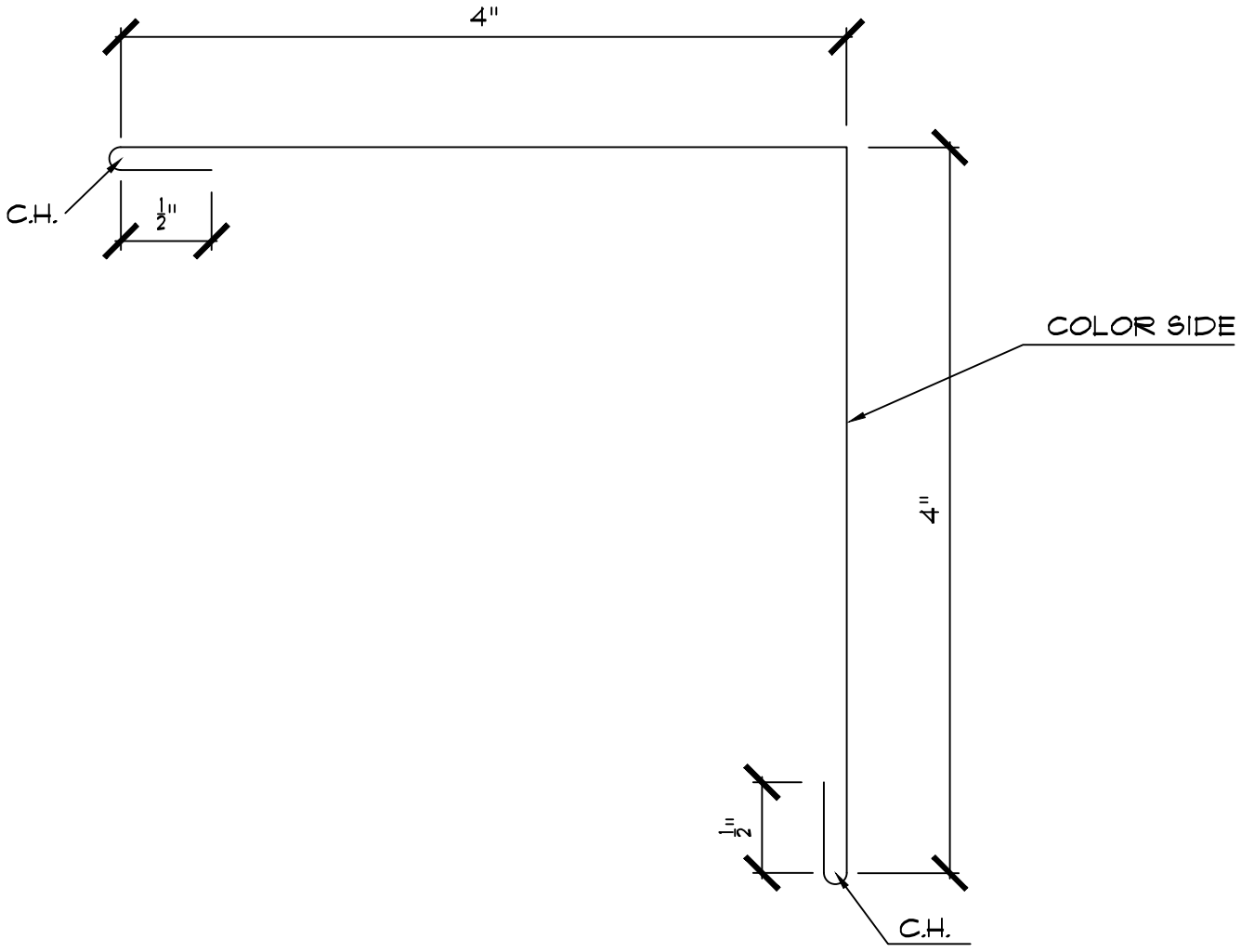

GAUGE:	STRETCH-OUT: 9"	PART #: OC111
COLOR:	# OF BREAKS: 5	PART NAME:
LENGTH: 10'-0"	QUANTITY:	OUTSIDE CORNER

CUSTOMER:	DRAWN BY:	AEP SPAN
JOB NAME:	DATE:	
AEPS ORDER #:	ACCEPTED BY:	
	DATE:	

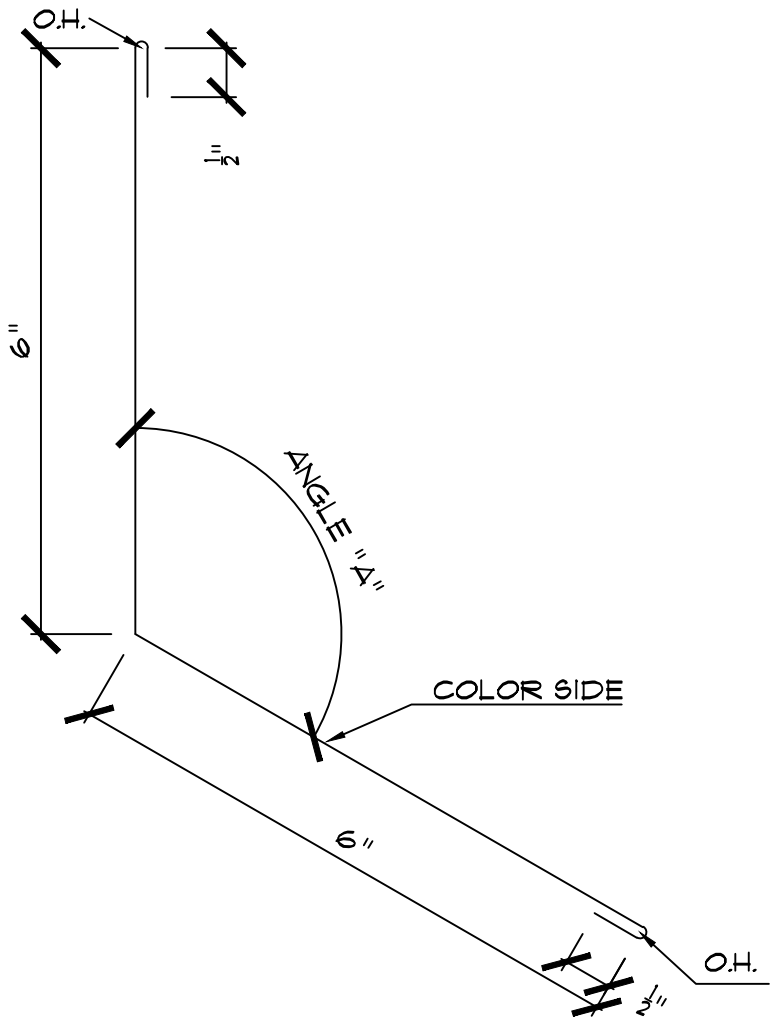

GAUGE:	STRETCH-OUT: 13"	PART #: PB113
COLOR:	# OF BREAKS: 5	PART NAME:
LENGTH: 10'-0"	QUANTITY:	PITCH BREAK

CUSTOMER:	DRAWN BY:	AEP SPAN
JOB NAME:	DATE:	
AEPS ORDER #:	ACCEPTED BY:	
	DATE:	

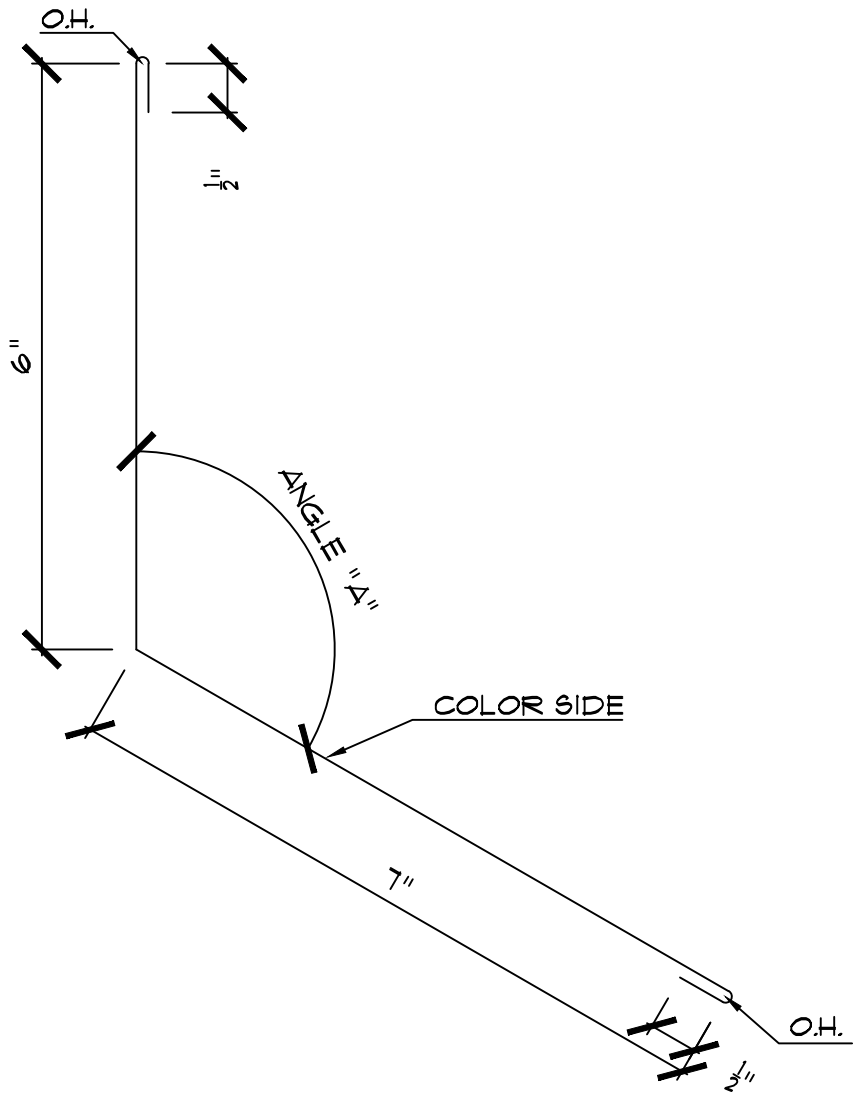

GAUGE:	STRETCH-OUT: 14"	PART #: PB115
COLOR:	# OF BREAKS: 5	PART NAME: PITCH BREAK
LENGTH: 10'-0"	QUANTITY:	

CUSTOMER:	DRAWN BY:	AEP SPAN
JOB NAME:	DATE:	
AEPS ORDER #:	ACCEPTED BY:	
	DATE:	

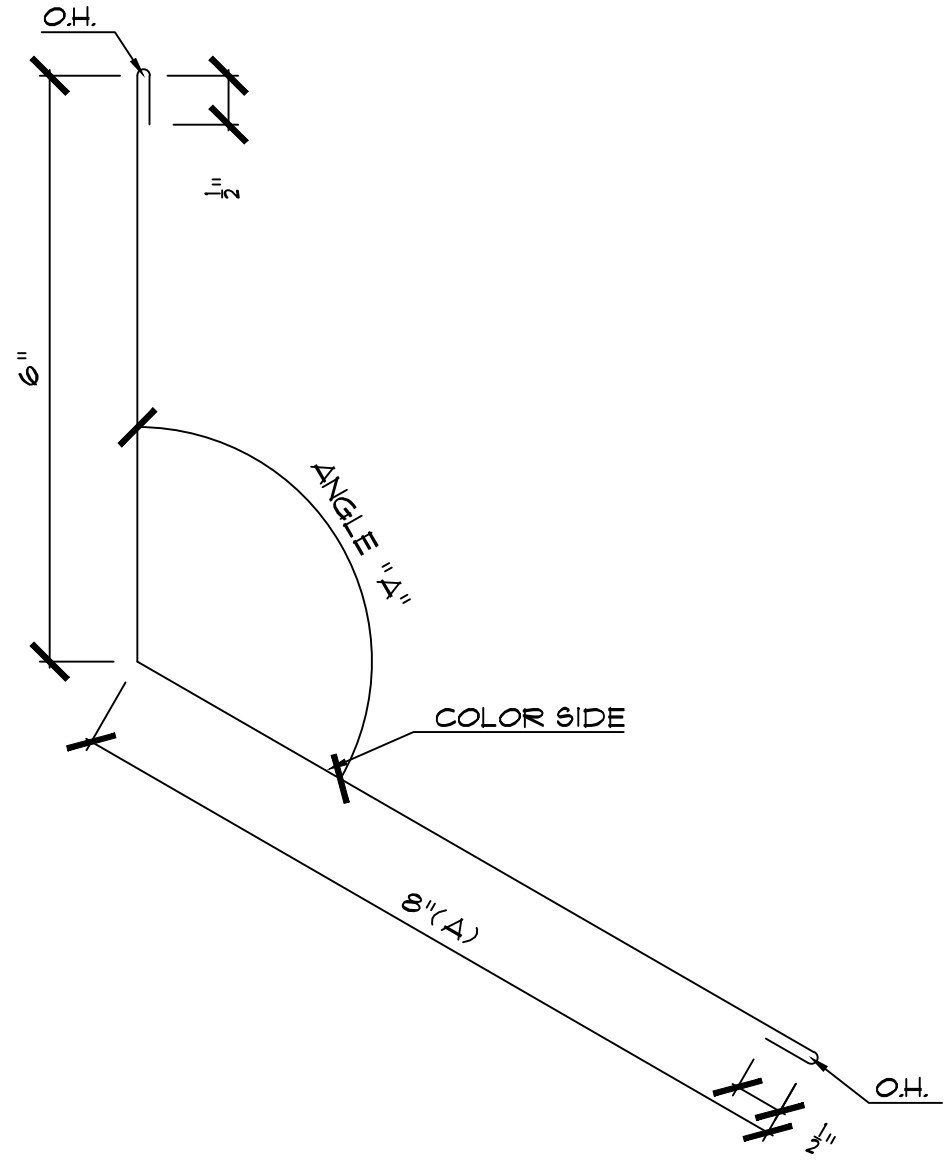

GAUGE:	STRETCH-OUT: 15"	PART #: PB117
COLOR:	# OF BREAKS: 5	PART NAME:
LENGTH: 10'-0"	QUANTITY:	PITCH BREAK

CUSTOMER:	DRAWN BY:	AEP SPAN
JOB NAME:	DATE:	
AEPS ORDER #:	ACCEPTED BY:	
	DATE:	

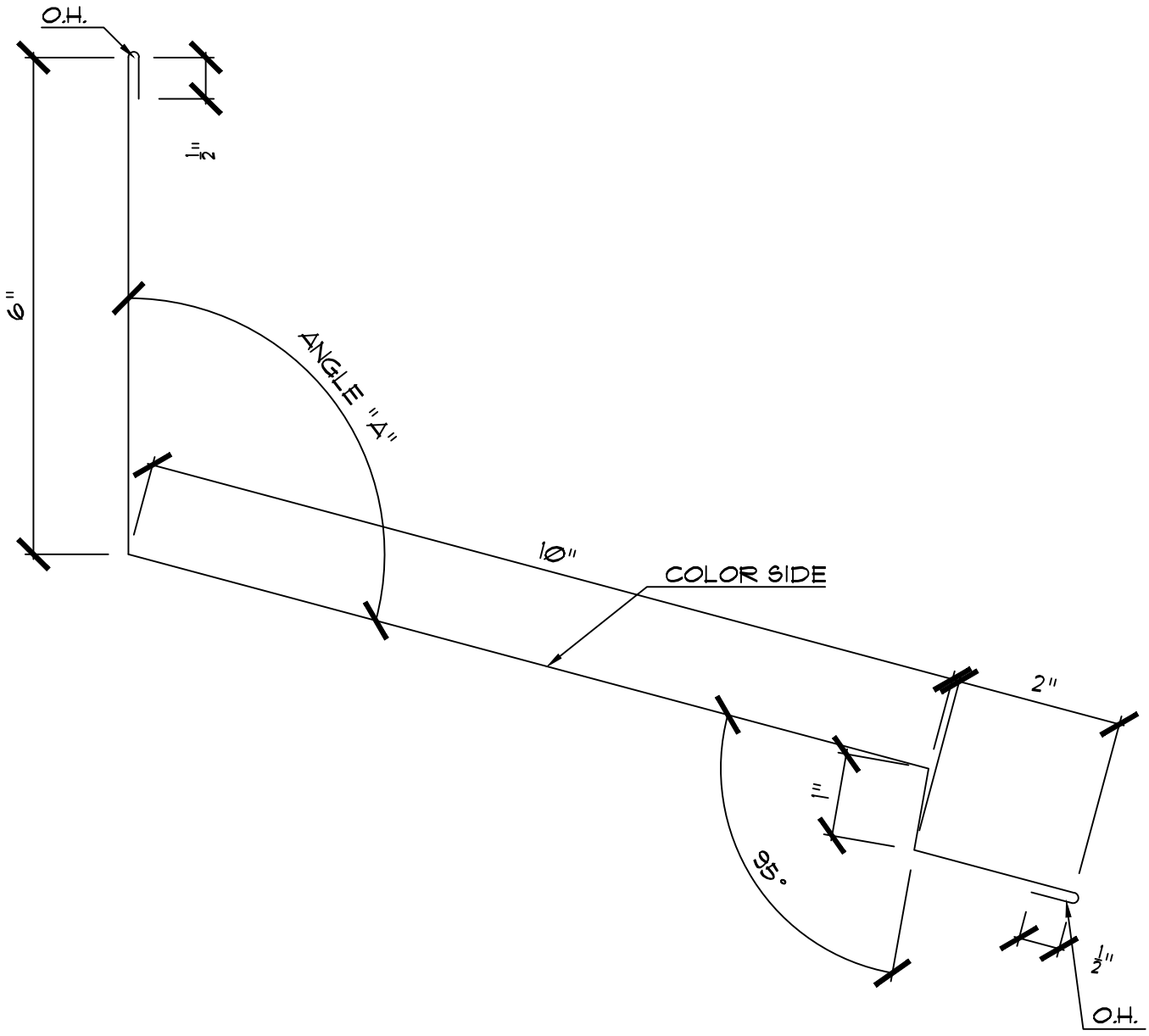

PART #: PB119

GAUGE:	STRETCH-OUT: 20"
COLOR:	# OF BREAKS: 7
LENGTH: 10'-0"	QUANTITY:

PART NAME:

VENTED PITCH BREAK

USED FOR SLOPES BETWEEN 1/4:12 & 6:12

CUSTOMER:

JOB NAME:

AEPS ORDER #:

DRAWN BY:

DATE:

ACCEPTED BY:

DATE:

AEP SPAN

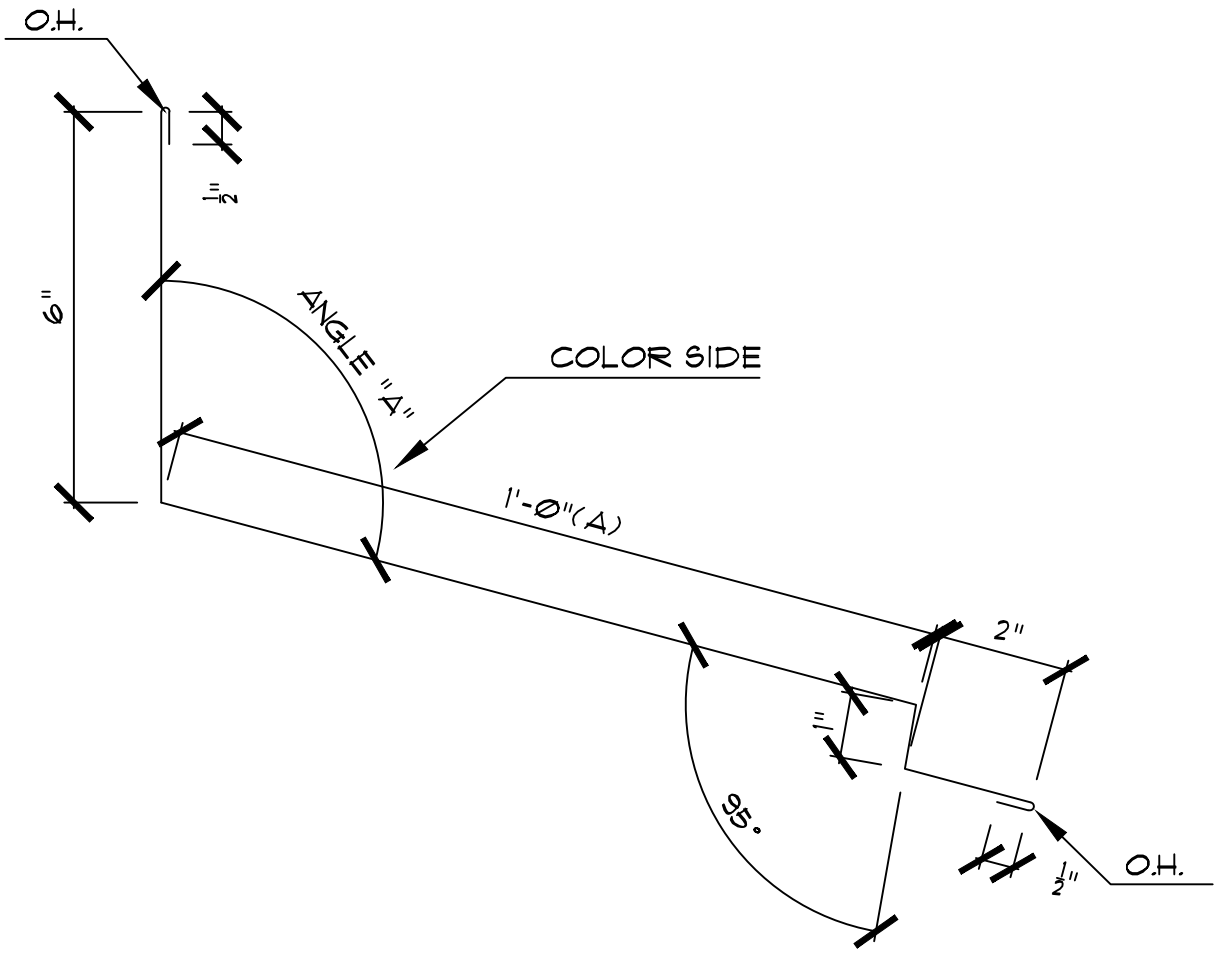

PART #: PB121

GAUGE:	STRETCH-OUT: 22"
COLOR:	# OF BREAKS: 7
LENGTH: 10'-0"	QUANTITY:

PART NAME:

VENTED PITCH BREAK

USED FOR SLOPES BETWEEN 6 1/4:12 & 12:12

CUSTOMER:

JOB NAME:

AEPS ORDER #:

DRAWN BY:

DATE:

ACCEPTED BY:

DATE:

AEP SPAN

Return to Menu

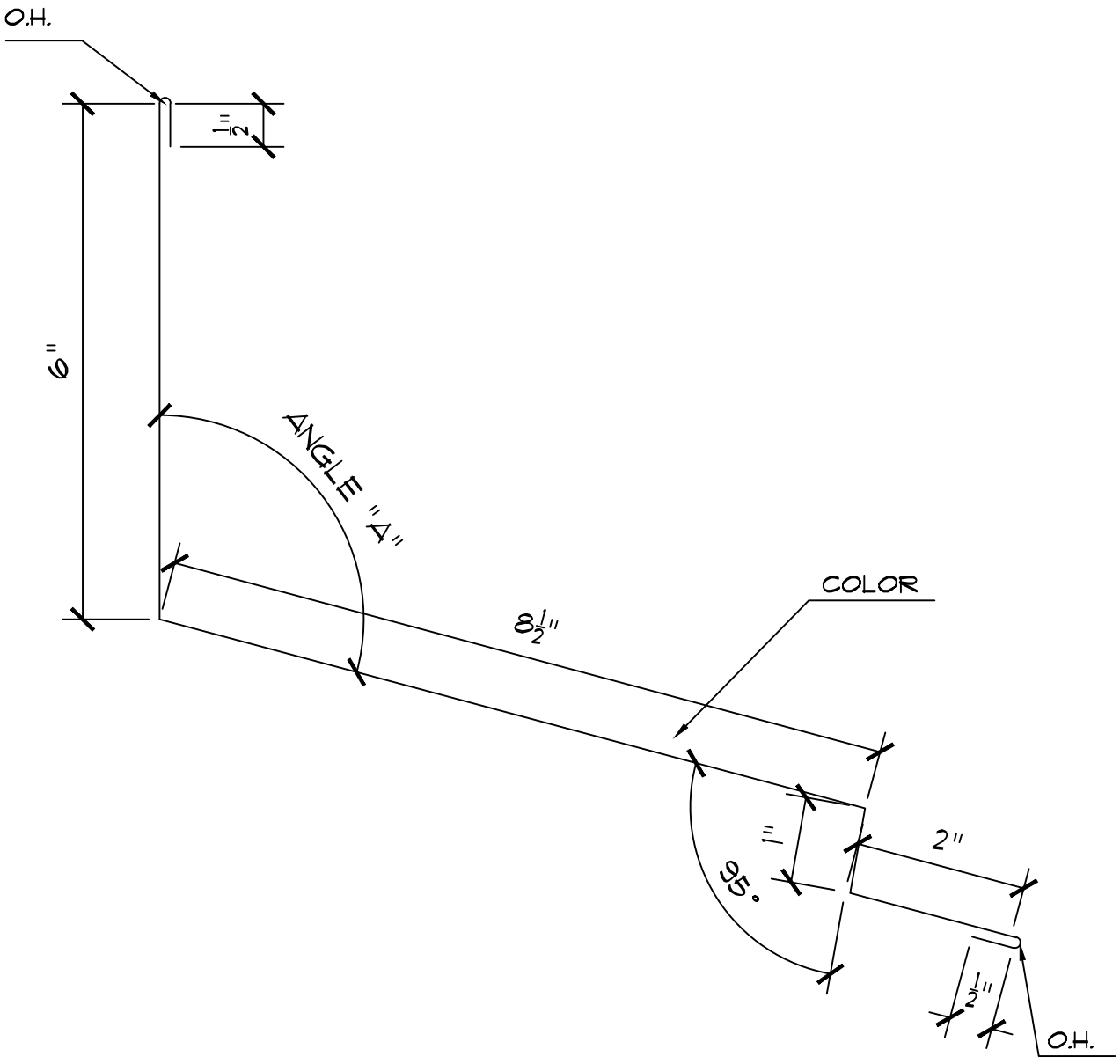

PART #: PB123

GAUGE:	STRETCH-OUT: 18 1/2"
COLOR:	# OF BREAKS: 7
LENGTH: 10'-0"	QUANTITY:

PART NAME:

NON-VENTED PITCH BREAK
(GRID-FRAMING) W/SLOPES BETWEEN 1/4:12 & 6:12

CUSTOMER:	DRAWN BY:
JOB NAME:	DATE:
AEPS ORDER #:	ACCEPTED BY:
	DATE:

AEP SPAN

Return to Menu

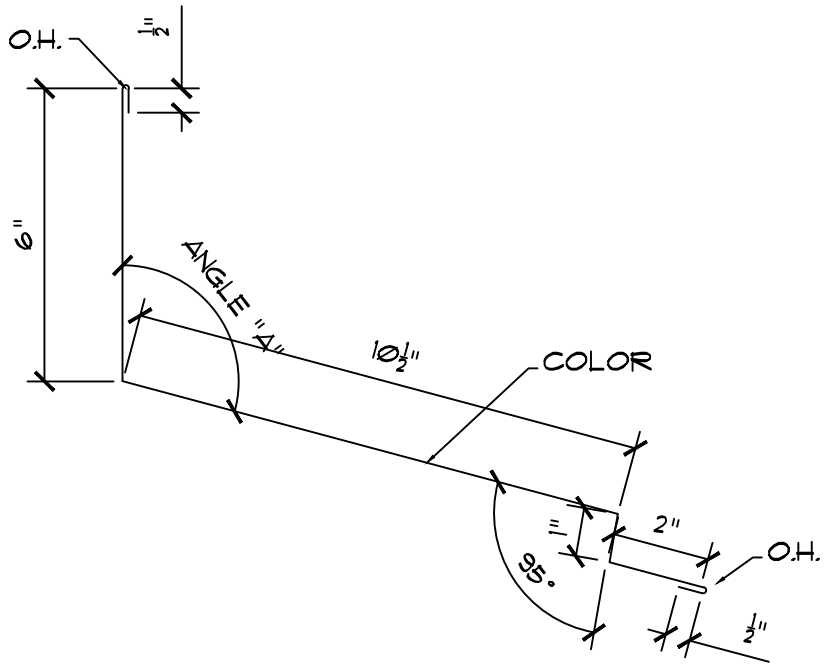

PART #: PB125

PART NAME:

NON-VENTED PITCHBREAK

(GRID-FRAMING) W/SLOPES BETWEEN 6 1/4:12 & 12:12

GAUGE:	STRETCH-OUT: 20 1/2"
COLOR:	# OF BREAKS: 7
LENGTH: 10'-0"	QUANTITY:

CUSTOMER:	DRAWN BY:
JOB NAME:	DATE:
AEPS ORDER #:	ACCEPTED BY:
	DATE:

AEP SPAN

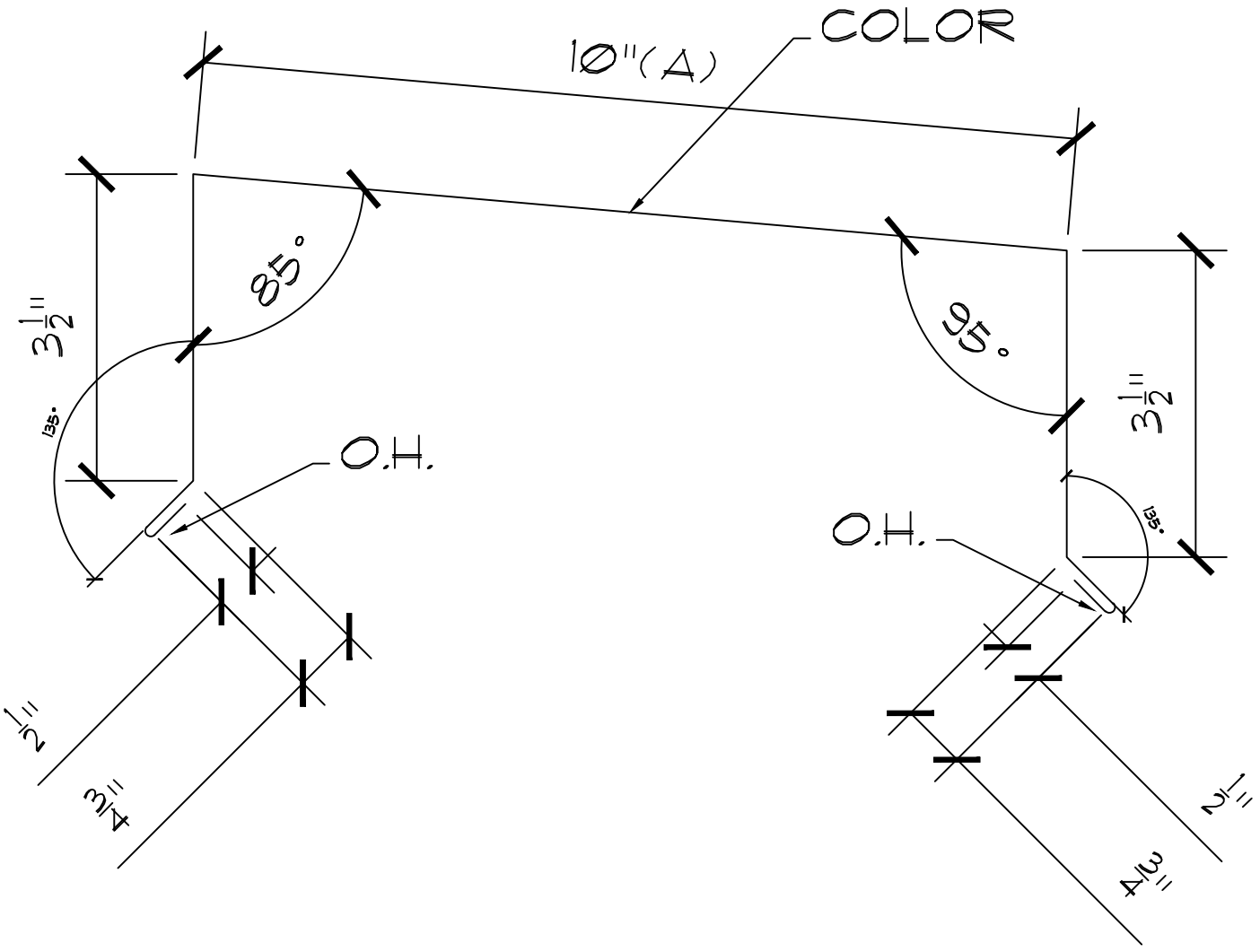

GAUGE:	STRETCH-OUT: 19 1/2"	PART #: PC129
COLOR:	# OF BREAKS: 8	PART NAME:
LENGTH: 10'-0"	QUANTITY:	(PARAPET) COPING CAP

CUSTOMER:	DRAWN BY:	AEP SPAN
JOB NAME:	DATE:	
AEPS ORDER #:	ACCEPTED BY:	
	DATE:	

Return to Menu

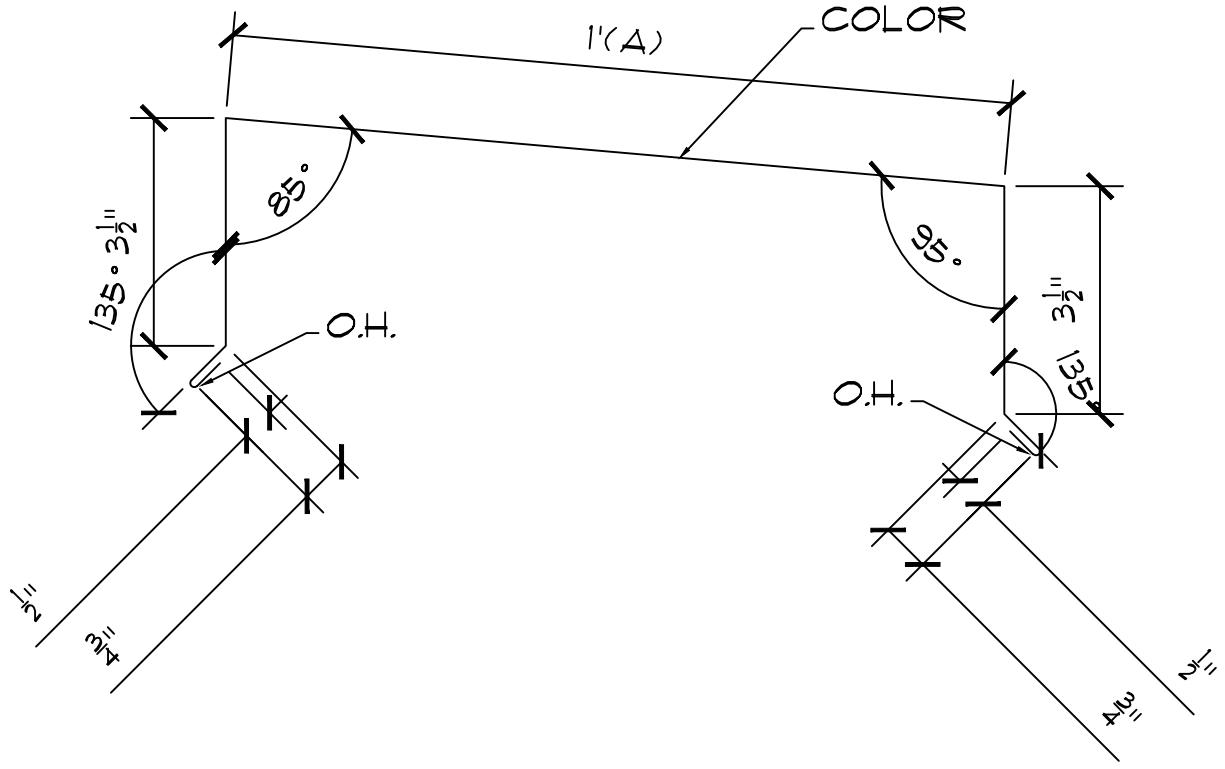

GAUGE:	STRETCH-OUT: 21 1/2"	PART #: PC131
COLOR:	# OF BREAKS: 8	PART NAME:
LENGTH: 10'-0"	QUANTITY:	(PARAPET) COPING CAP

CUSTOMER:	DRAWN BY:	AEP SPAN
JOB NAME:	DATE:	
AEPS ORDER #:	ACCEPTED BY:	
	DATE:	

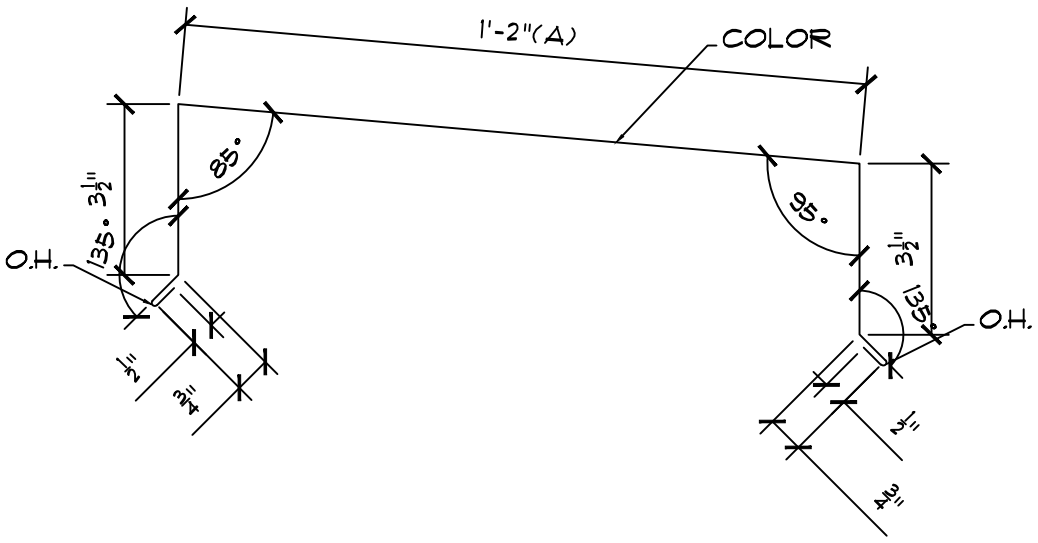

GAUGE:	STRETCH-OUT: 23 1/2"	PART #: PC133
COLOR:	# OF BREAKS: 8	PART NAME:
LENGTH: 10'-0"	QUANTITY:	PARAPET COPING CAP

CUSTOMER:	DRAWN BY:	AEP SPAN
JOB NAME:	DATE:	
AEPS ORDER #:	ACCEPTED BY:	
	DATE:	

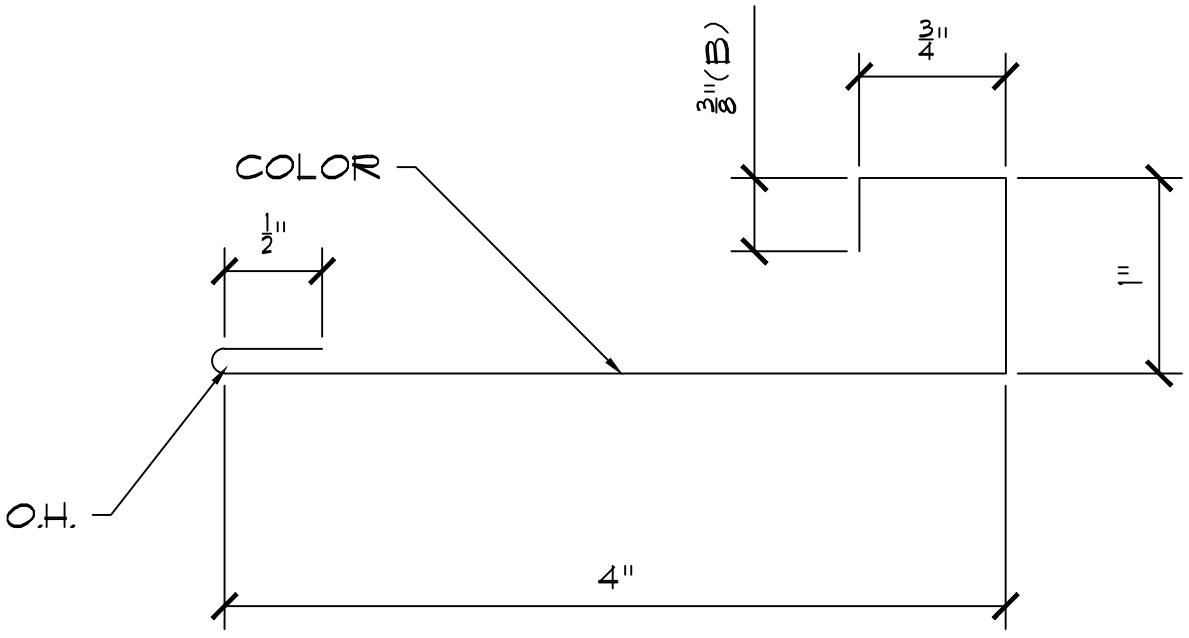

GAUGE:	STRETCH-OUT: 6 5/8"	PART #: PR135
COLOR:	# OF BREAKS: 5	PART NAME:
LENGTH: 10'-0"	QUANTITY:	PANEL RECEIVER

CUSTOMER:	DRAWN BY:	AEP SPAN
JOB NAME:	DATE:	
AEPS ORDER #:	ACCEPTED BY:	
	DATE:	

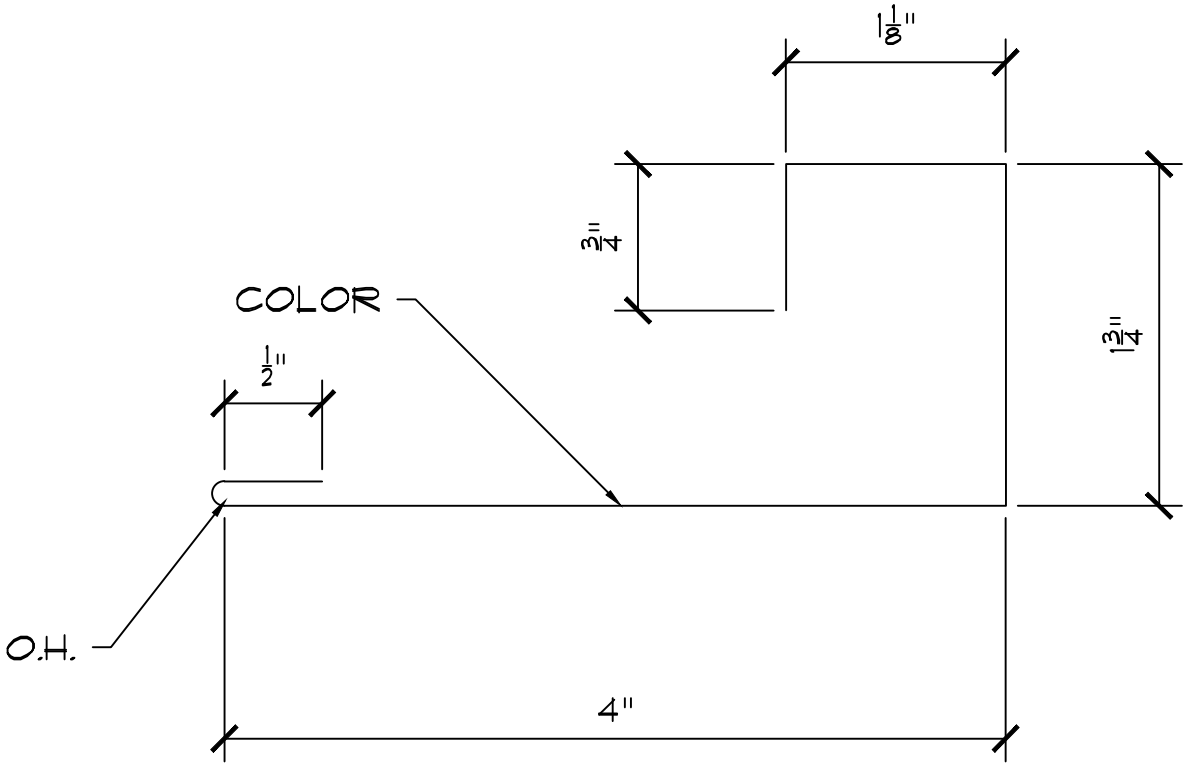

GAUGE:	STRETCH-OUT: 8 1/8"	PART #: PR138
COLOR:	# OF BREAKS: 5	PART NAME:
LENGTH: 10'-0"	QUANTITY:	PANEL RECEIVER

CUSTOMER:	DRAWN BY:	AEP SPAN
JOB NAME:	DATE:	
AEPS ORDER #:	ACCEPTED BY:	
	DATE:	

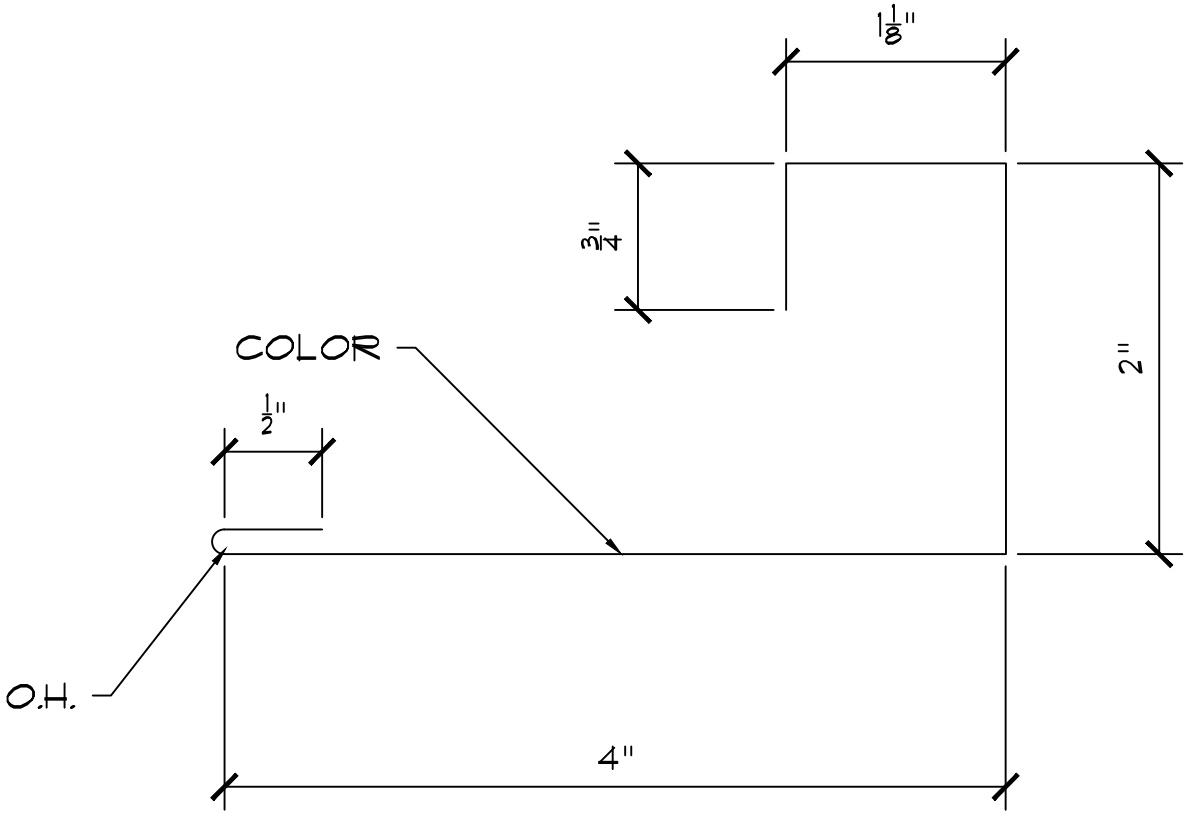

GAUGE:	STRETCH-OUT: 8 3/8"	PART #: PR139
COLOR:	# OF BREAKS: 5	PART NAME:
LENGTH: 10'-0"	QUANTITY:	PANEL RECEIVER

CUSTOMER:	DRAWN BY:	AEP SPAN
JOB NAME:	DATE:	
AEPS ORDER #:	ACCEPTED BY:	
	DATE:	

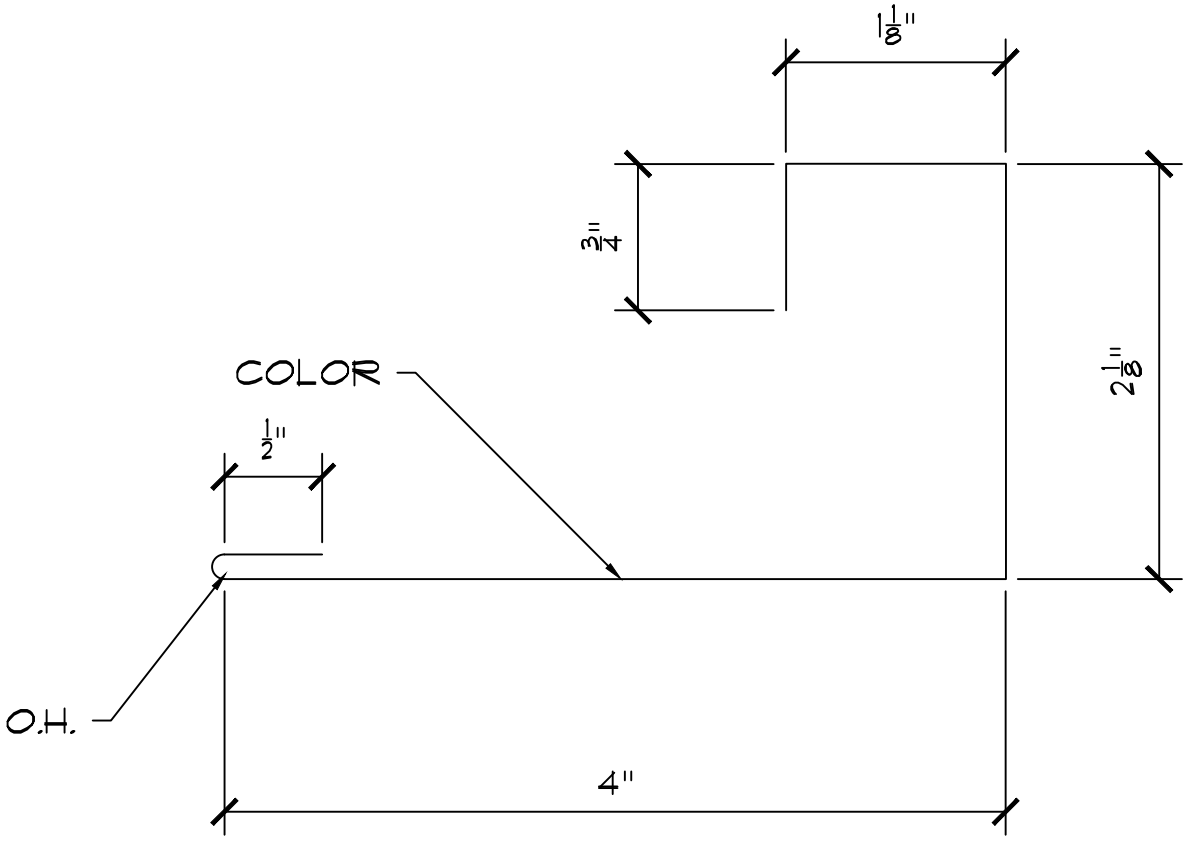

GAUGE:	STRETCH-OUT: 8 1/2"	PART #: PR145
COLOR:	# OF BREAKS: 5	PART NAME:
LENGTH: 10'-0"	QUANTITY:	PANEL RECEIVER

CUSTOMER:	DRAWN BY:	AEP SPAN
JOB NAME:	DATE:	
AEPS ORDER #:	ACCEPTED BY:	
	DATE:	

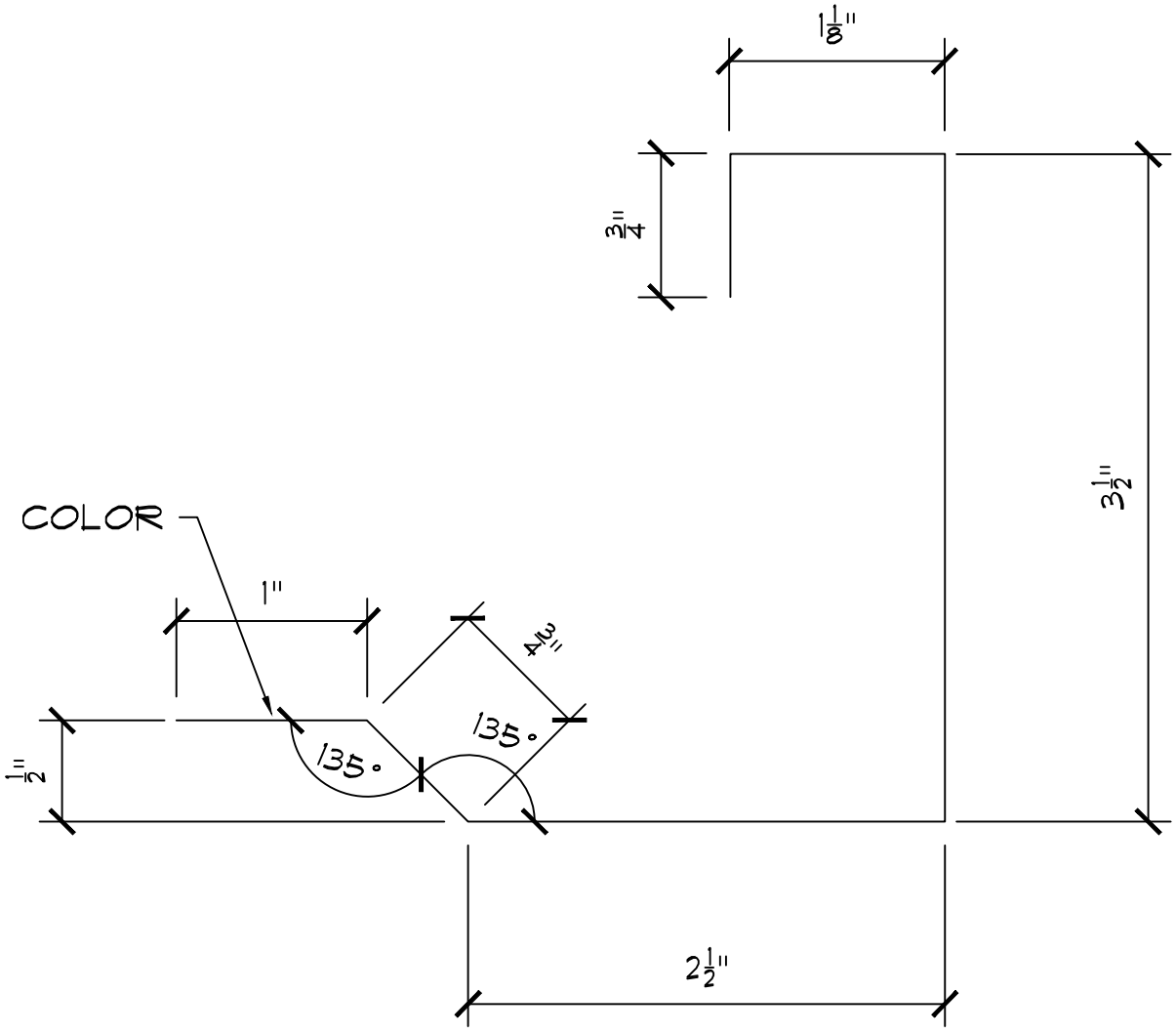

GAUGE:	STRETCH-OUT: 9 5/8"	PART #: PR143
COLOR:	# OF BREAKS: 5	PART NAME:
LENGTH: 10'-0"	QUANTITY:	OFFSET PANEL RECEIVER

CUSTOMER:	DRAWN BY:	AEP SPAN
JOB NAME:	DATE:	
AEPS ORDER #:	ACCEPTED BY:	
	DATE:	

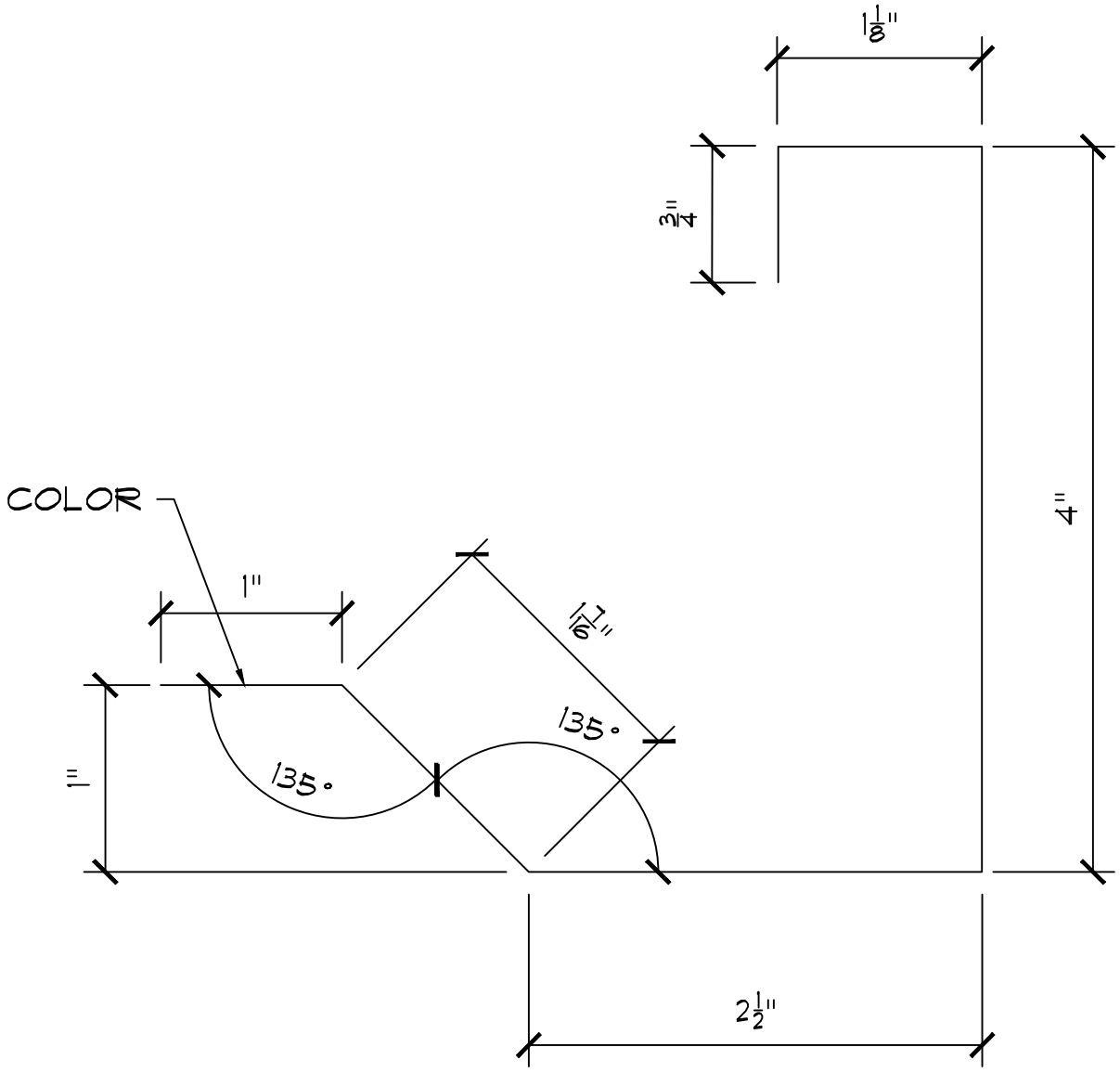

GAUGE:	STRETCH-OUT: 10 13/16"	PART #: PR144
COLOR:	# OF BREAKS: 5	PART NAME:
LENGTH: 10'-0"	QUANTITY:	OFFSET PANEL RECEIVER

CUSTOMER:	DRAWN BY:	AEP SPAN
JOB NAME:	DATE:	
AEPS ORDER #:	ACCEPTED BY:	
	DATE:	

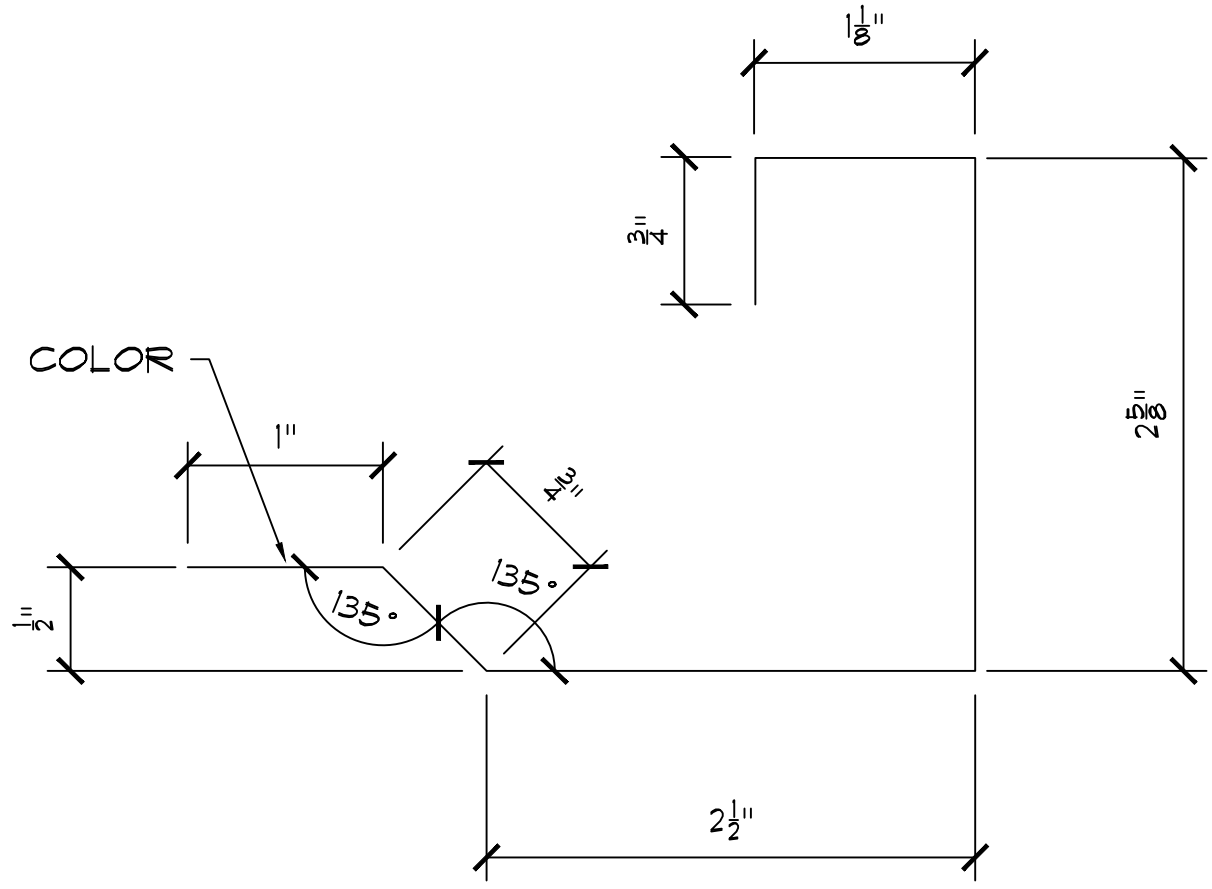

GAUGE:	STRETCH-OUT: 8 3/4"	PART #: PR146
COLOR:	# OF BREAKS: 5	PART NAME:
LENGTH: 10'-0"	QUANTITY:	OFFSET PANEL RECEIVER

CUSTOMER:	DRAWN BY:	AEP SPAN
JOB NAME:	DATE:	
AEPS ORDER #:	ACCEPTED BY:	
	DATE:	

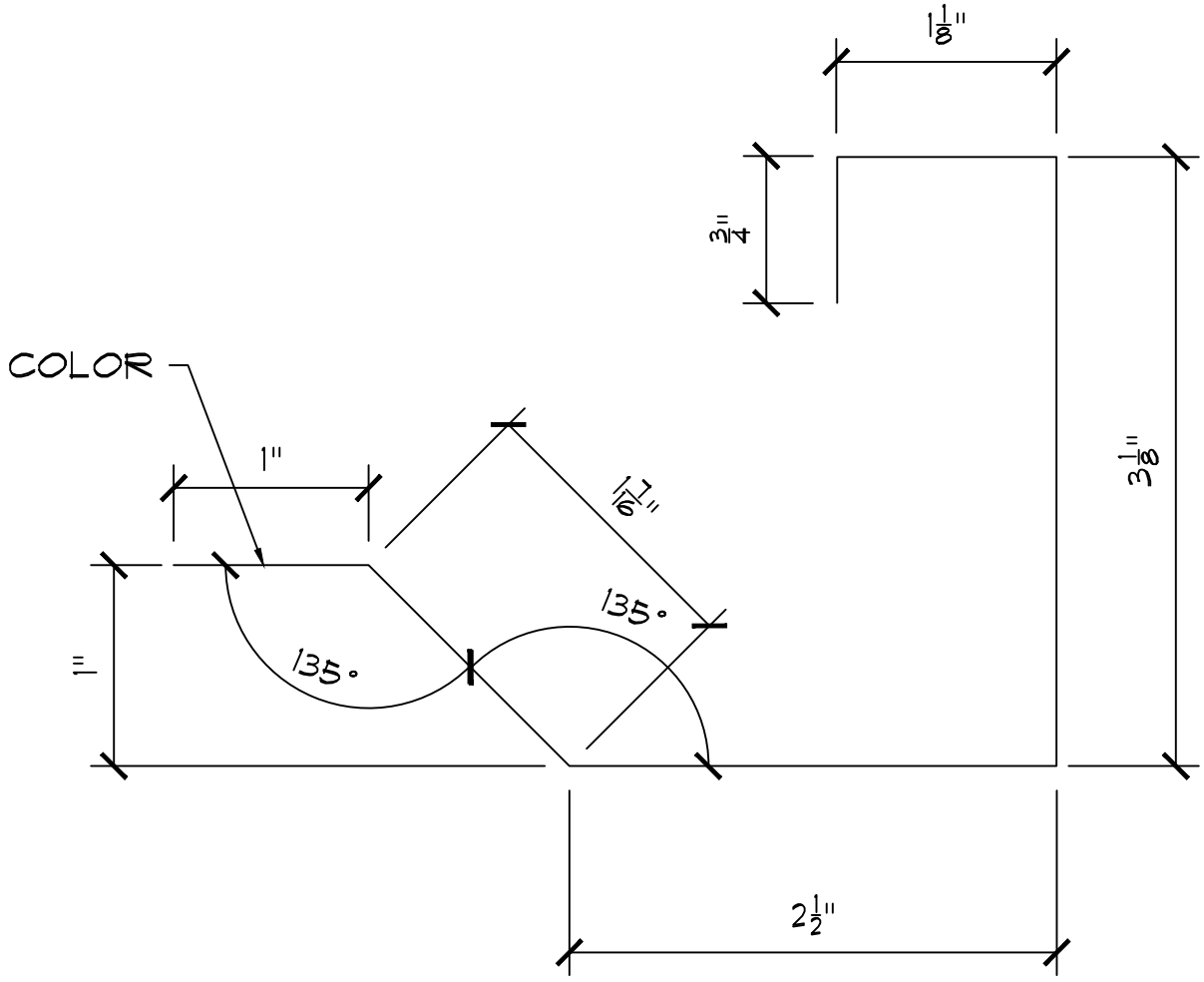

GAUGE:	STRETCH-OUT: 9 15/16"	PART #: PR147
COLOR:	# OF BREAKS: 5	PART NAME:
LENGTH: 10'-0"	QUANTITY:	PANEL RECEIVER

CUSTOMER:	DRAWN BY:	AEP SPAN
JOB NAME:	DATE:	
AEPS ORDER #:	ACCEPTED BY:	
	DATE:	

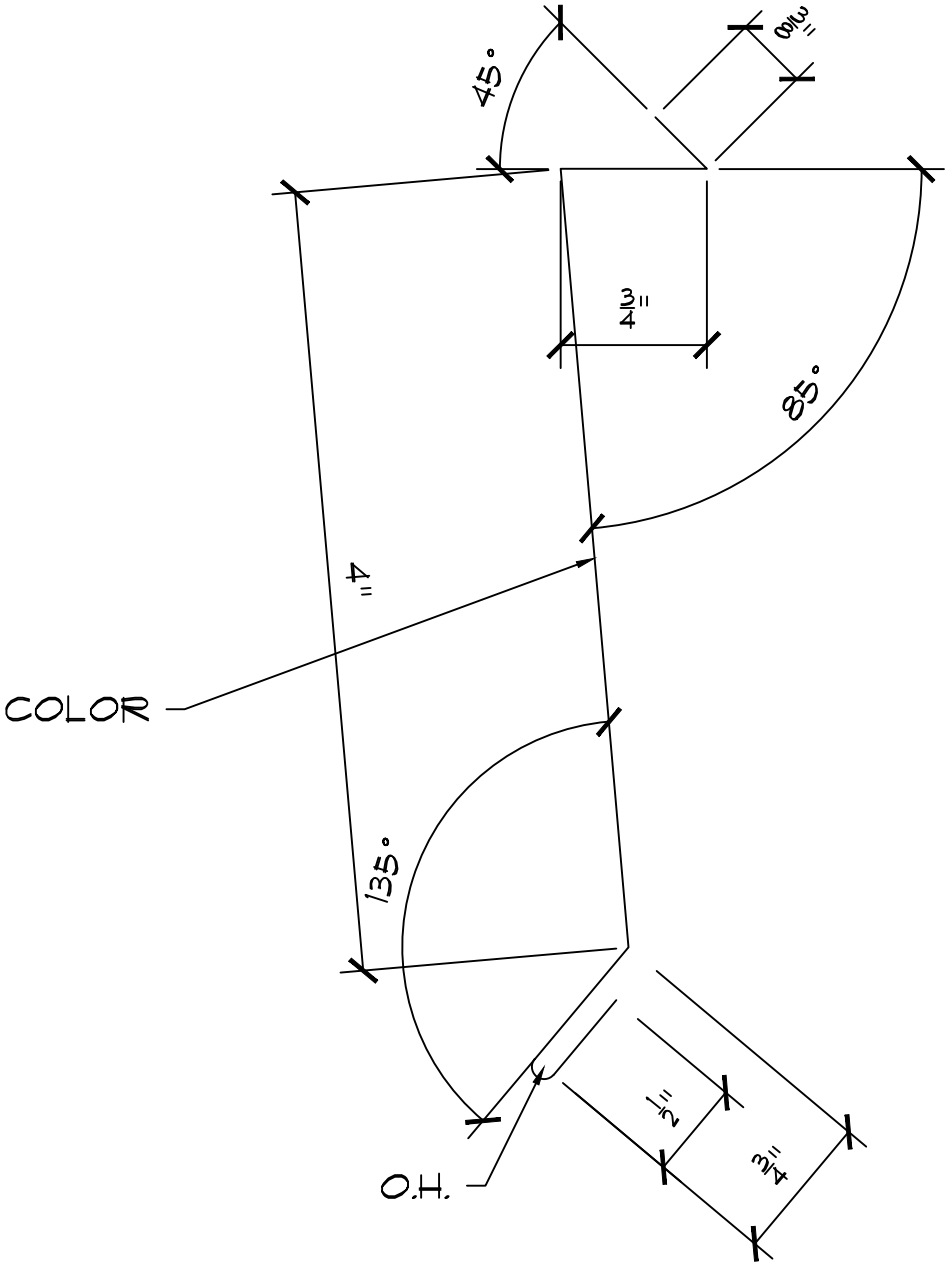

GAUGE:	STRETCH-OUT: 6 3/8"	PART #: RG145
COLOR:	# OF BREAKS: 5	PART NAME:
LENGTH: 10'-0"	QUANTITY:	SAW CUT REGLET

CUSTOMER:	DRAWN BY:	AEP SPAN
JOB NAME:	DATE:	
AEPS ORDER #:	ACCEPTED BY:	
	DATE:	

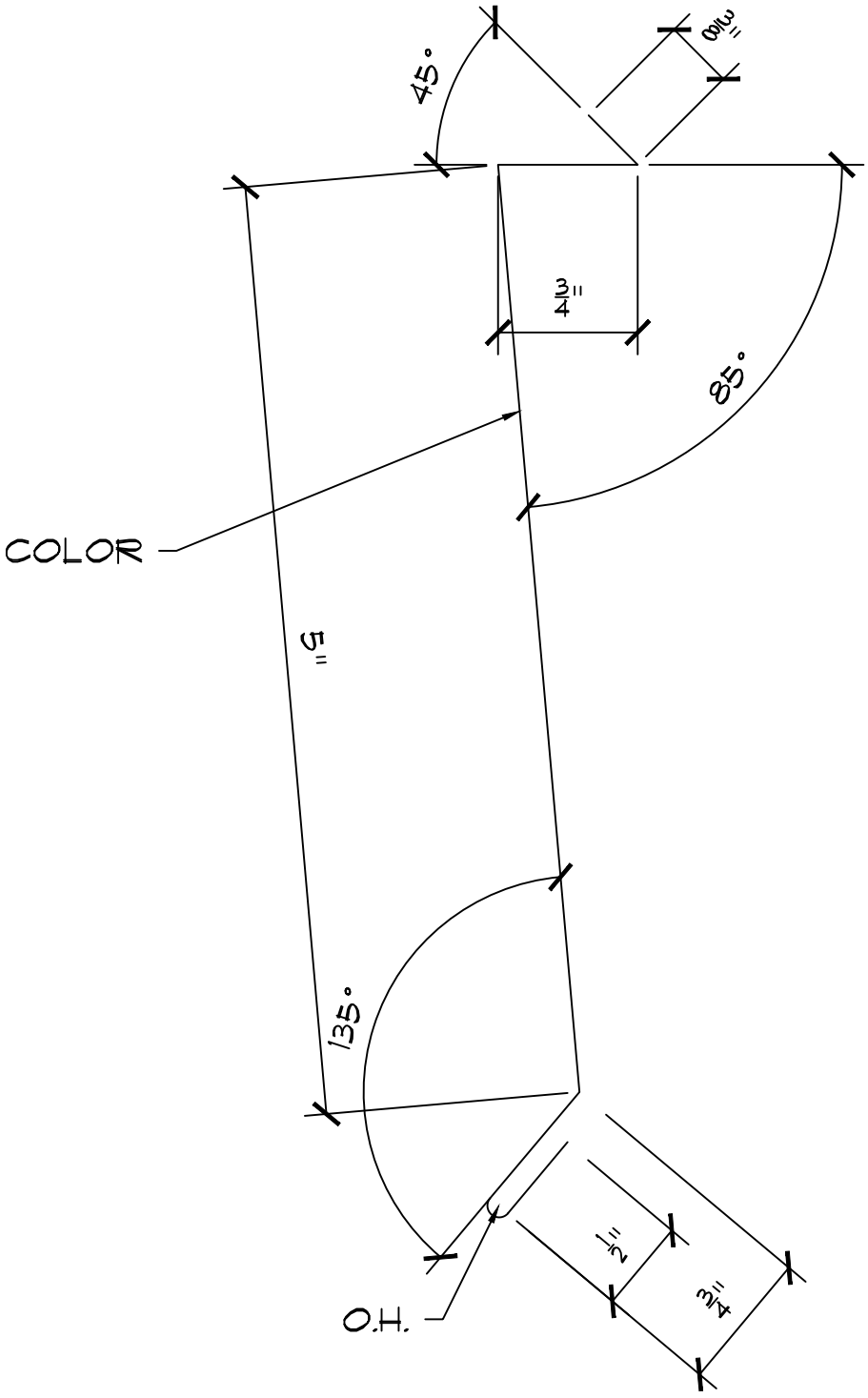

GAUGE:	STRETCH-OUT: 7 3/8"	PART #: RG147
COLOR:	# OF BREAKS: 5	PART NAME:
LENGTH: 10'-0"	QUANTITY:	SAW CUT REGLET

CUSTOMER:	DRAWN BY:	AEP SPAN
JOB NAME:	DATE:	
AEPS ORDER #:	ACCEPTED BY:	
	DATE:	

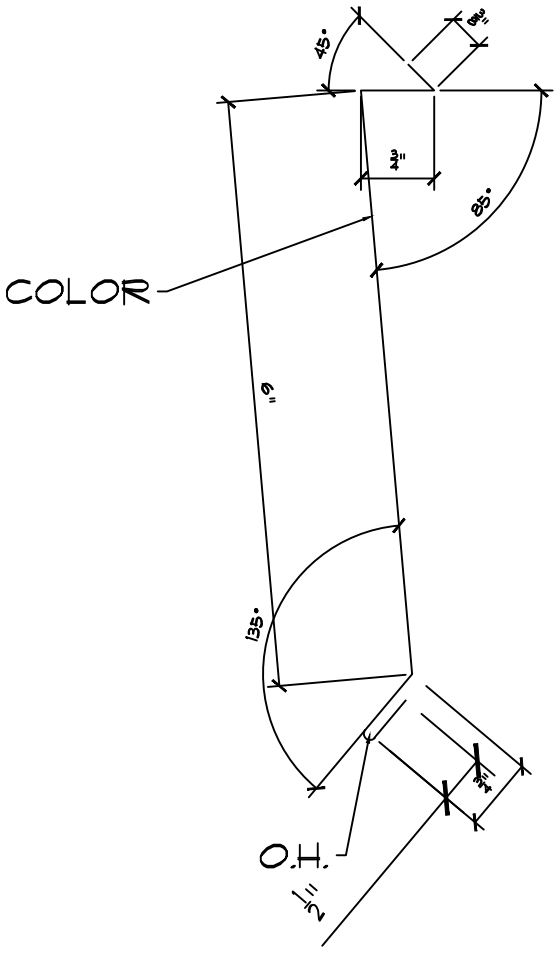

GAUGE:	STRETCH-OUT: 8 3/8"	PART #: RG149
COLOR:	# OF BREAKS: 5	PART NAME:
LENGTH: 10'-0"	QUANTITY:	SAW CUT REGLET

CUSTOMER:	DRAWN BY:	AEP SPAN
JOB NAME:	DATE:	
AEPS ORDER #:	ACCEPTED BY:	
	DATE:	

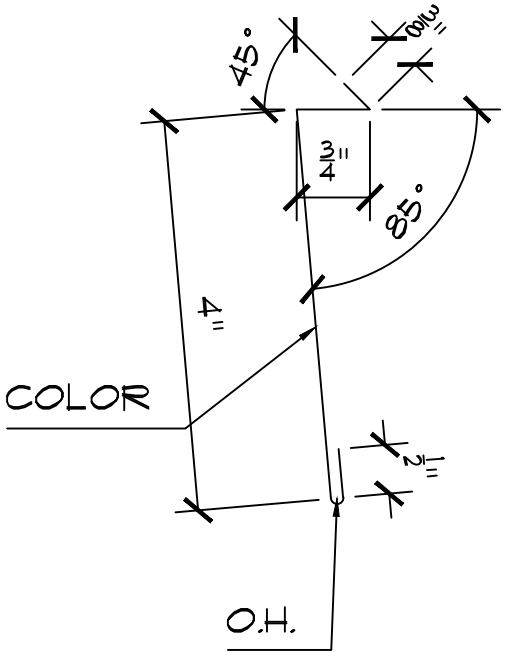

GAUGE:	STRETCH-OUT: 5 5/8"	PART #: RG151
COLOR:	# OF BREAKS: 4	PART NAME:
LENGTH: 10'-0"	QUANTITY:	SAW CUT REGLET

CUSTOMER:	DRAWN BY:	AEP SPAN
JOB NAME:	DATE:	
AEPS ORDER #:	ACCEPTED BY:	
	DATE:	

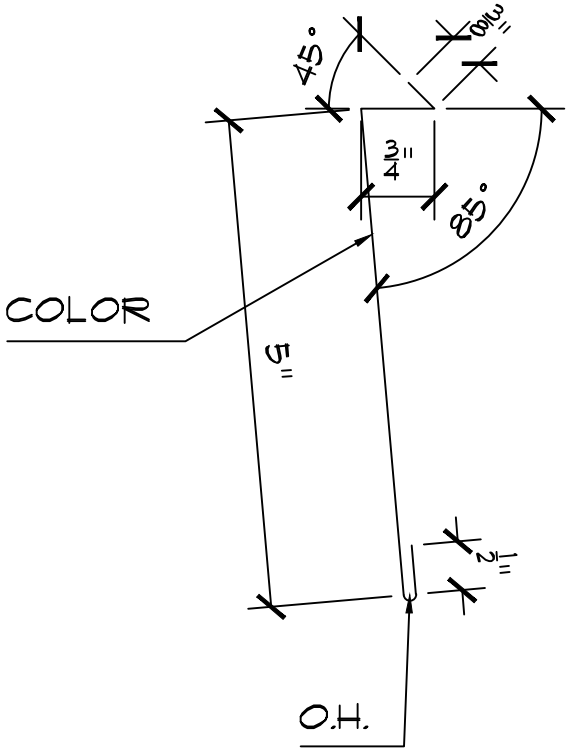

GAUGE:	STRETCH-OUT: 6 5/8"	PART #: RG153
COLOR:	# OF BREAKS: 4	PART NAME:
LENGTH: 10'-0"	QUANTITY:	SAW CUT REGLET

CUSTOMER:	DRAWN BY:	AEP SPAN
JOB NAME:	DATE:	
AEPS ORDER #:	ACCEPTED BY:	
	DATE:	

Return to Menu

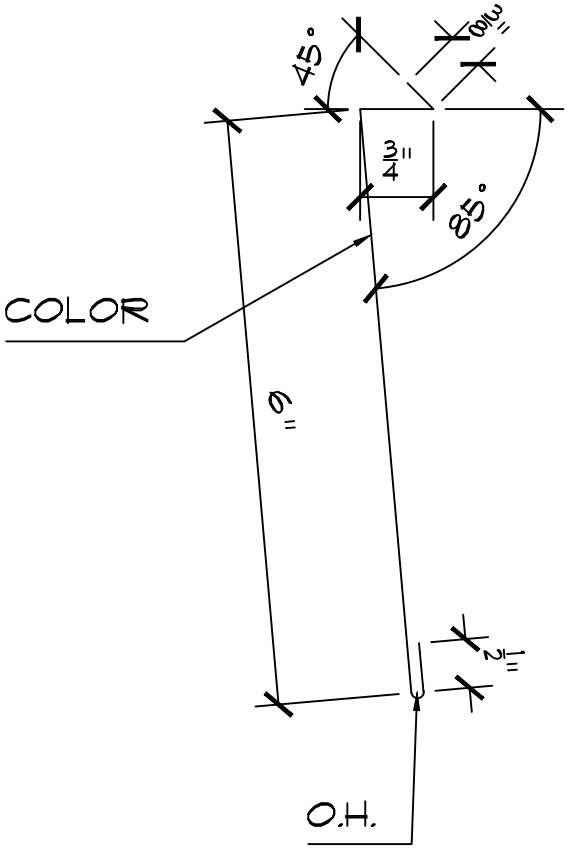

GAUGE:	STRETCH-OUT: 7 5/8"	PART #: RG155
COLOR:	# OF BREAKS: 4	PART NAME:
LENGTH: 10'-0"	QUANTITY:	SAW CUT REGLET

CUSTOMER:	DRAWN BY:	AEP SPAN
JOB NAME:	DATE:	
AEPS ORDER #:	ACCEPTED BY:	
	DATE:	

Return to Menu

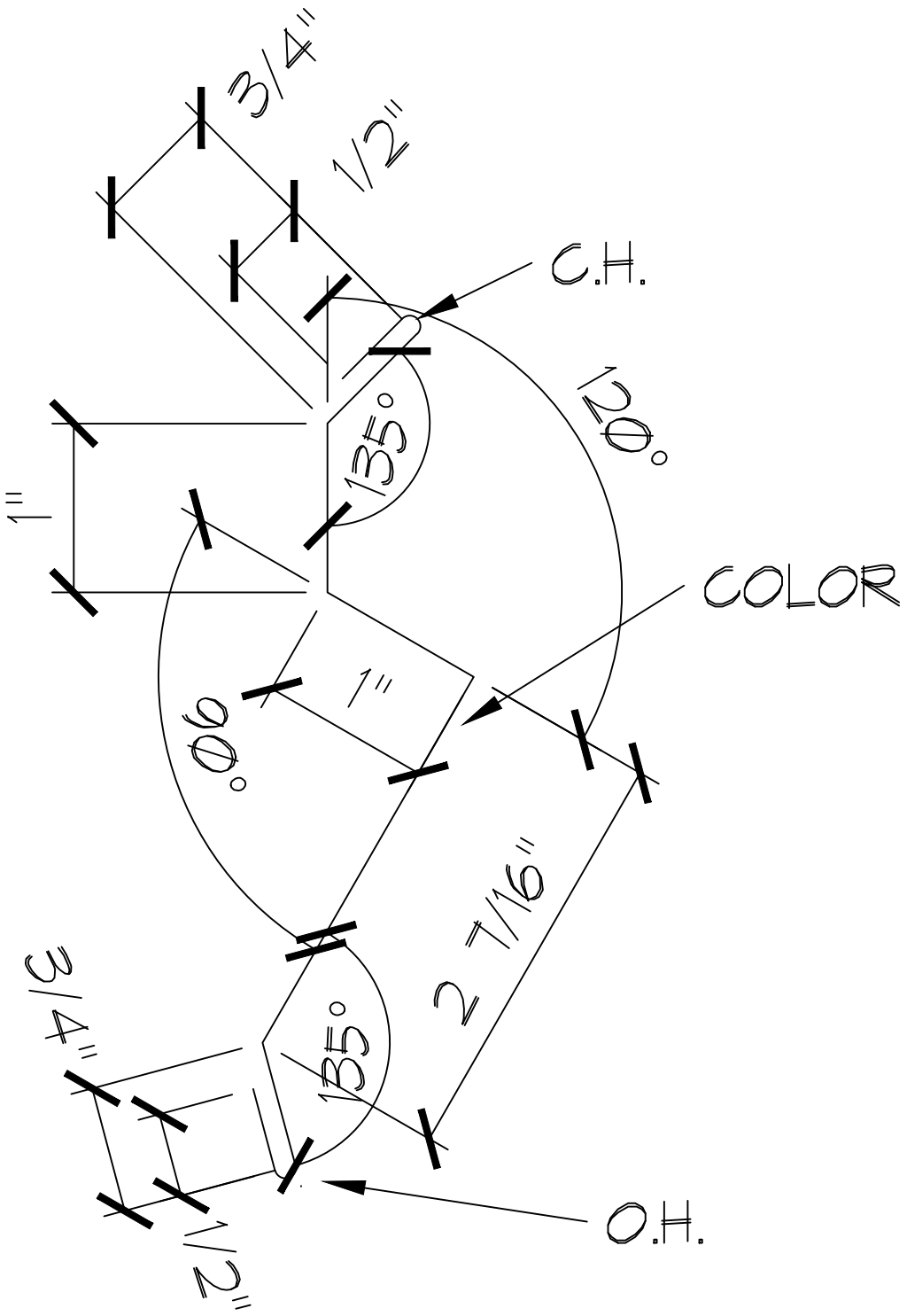

GAUGE:	STRETCH-OUT: 7"	PART #: RG157
COLOR:	# OF BREAKS: 8	PART NAME:
LENGTH: 10'-0"	QUANTITY:	SURFACE MOUNTED REGLET

CUSTOMER:	DRAWN BY:	AEP SPAN
JOB NAME:	DATE:	
AEPS ORDER #:	ACCEPTED BY:	
	DATE:	

Return to Menu

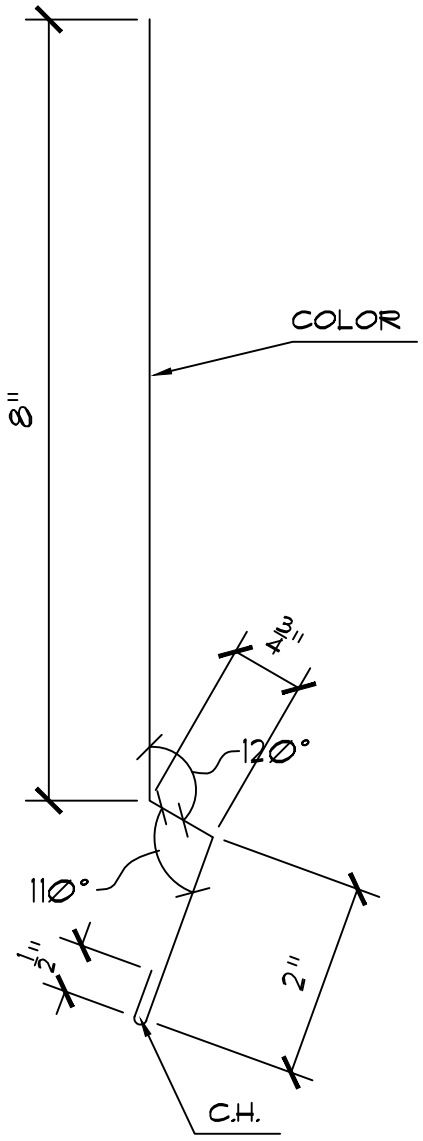

GAUGE:	STRETCH-OUT: 11 1/4"	PART #: RG160
COLOR:	# OF BREAKS: 4	PART NAME:
LENGTH: 10'-0"	QUANTITY:	MASONARY BASE REGLET

CUSTOMER:	DRAWN BY:	AEP SPAN
JOB NAME:	DATE:	
AEPS ORDER #:	ACCEPTED BY:	
	DATE:	

Return to Menu

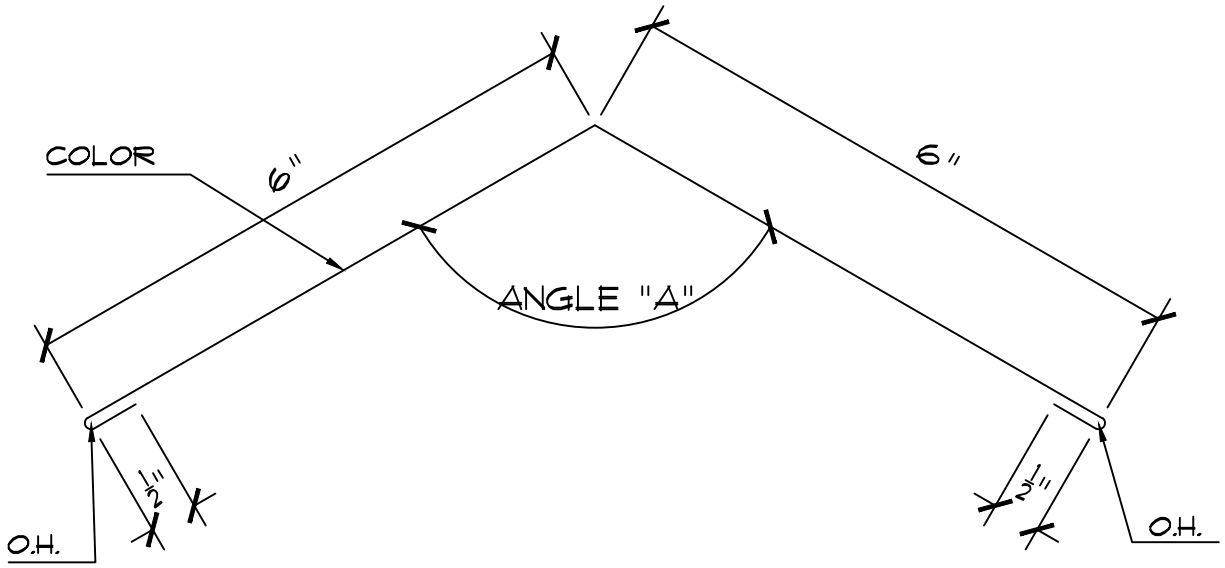

GAUGE:	STRETCH–OUT: 13"	PART #: RH162
COLOR:	# OF BREAKS: 5	PART NAME:
LENGTH: 10'-0"	QUANTITY:	RIDGE/HIP CAP

CUSTOMER:	DRAWN BY:	AEP SPAN
JOB NAME:	DATE:	
AEPS ORDER #:	ACCEPTED BY:	
	DATE:	

Return to Menu

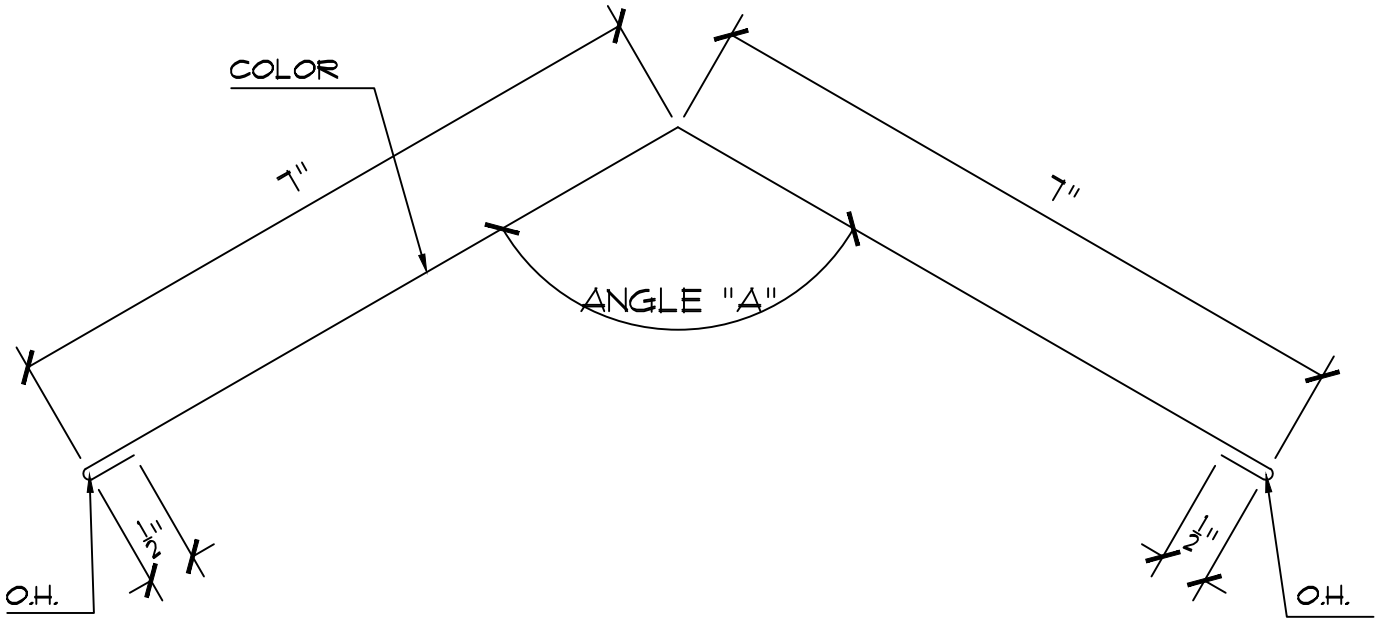

GAUGE:	STRETCH-OUT: 15"	PART #: RH164
COLOR:	# OF BREAKS: 5	PART NAME:
LENGTH: 10'-0"	QUANTITY:	RIDGE/HIP CAP

CUSTOMER:	DRAWN BY:	AEP SPAN
JOB NAME:	DATE:	
AEPS ORDER #:	ACCEPTED BY:	
	DATE:	

Return to Menu

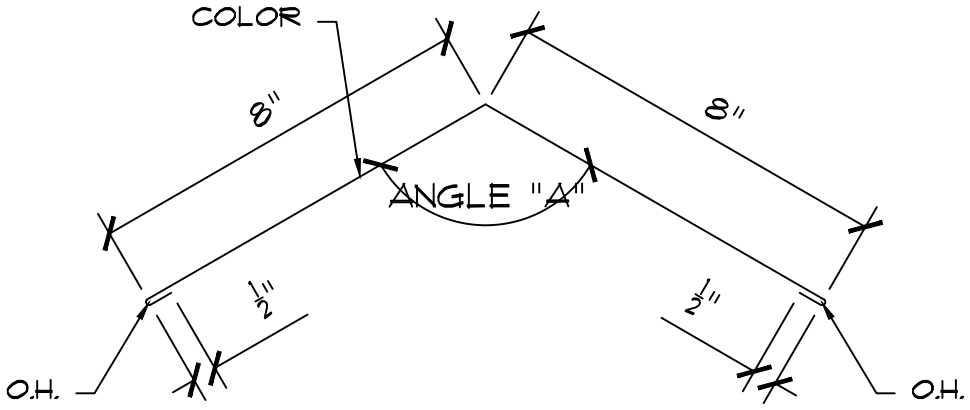

GAUGE:	STRETCH-OUT: 17"	PART #: RH166
COLOR:	# OF BREAKS: 5	PART NAME:
LENGTH: 10'-0"	QUANTITY:	RIDGE/HIP CAP

CUSTOMER:	DRAWN BY:	AEP SPAN
JOB NAME:	DATE:	
AEPS ORDER #:	ACCEPTED BY:	
	DATE:	

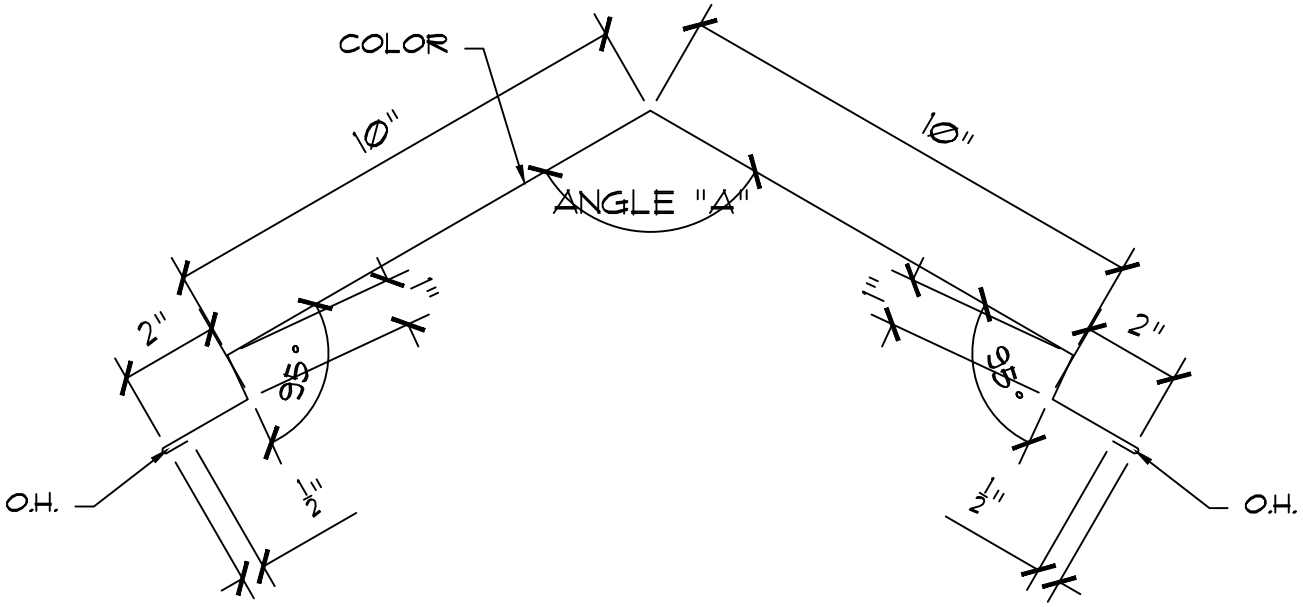

GAUGE:	STRETCH-OUT: 27"	PART #: RH168
COLOR:	# OF BREAKS: 9	PART NAME:
LENGTH: 10'-0"	QUANTITY:	VENTED RIDGE/HIP

CUSTOMER:	DRAWN BY:	AEP SPAN
JOB NAME:	DATE:	
AEPS ORDER #:	ACCEPTED BY:	
	DATE:	

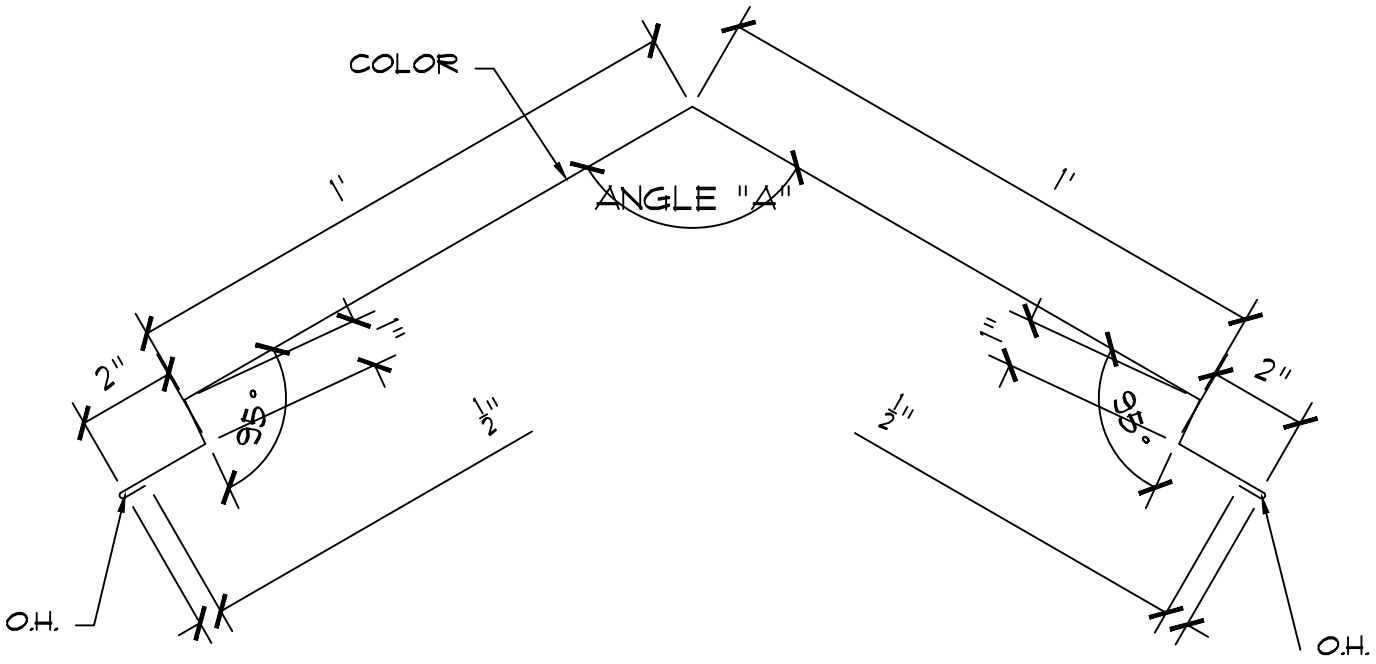

GAUGE:	STRETCH-OUT: 31"	PART #: RH170
COLOR:	# OF BREAKS: 9	PART NAME:
LENGTH: 10'-0"	QUANTITY:	VENTED RIDGE/HIP

CUSTOMER:	DRAWN BY:	AEP SPAN
JOB NAME:	DATE:	
AEPS ORDER #:	ACCEPTED BY:	
	DATE:	

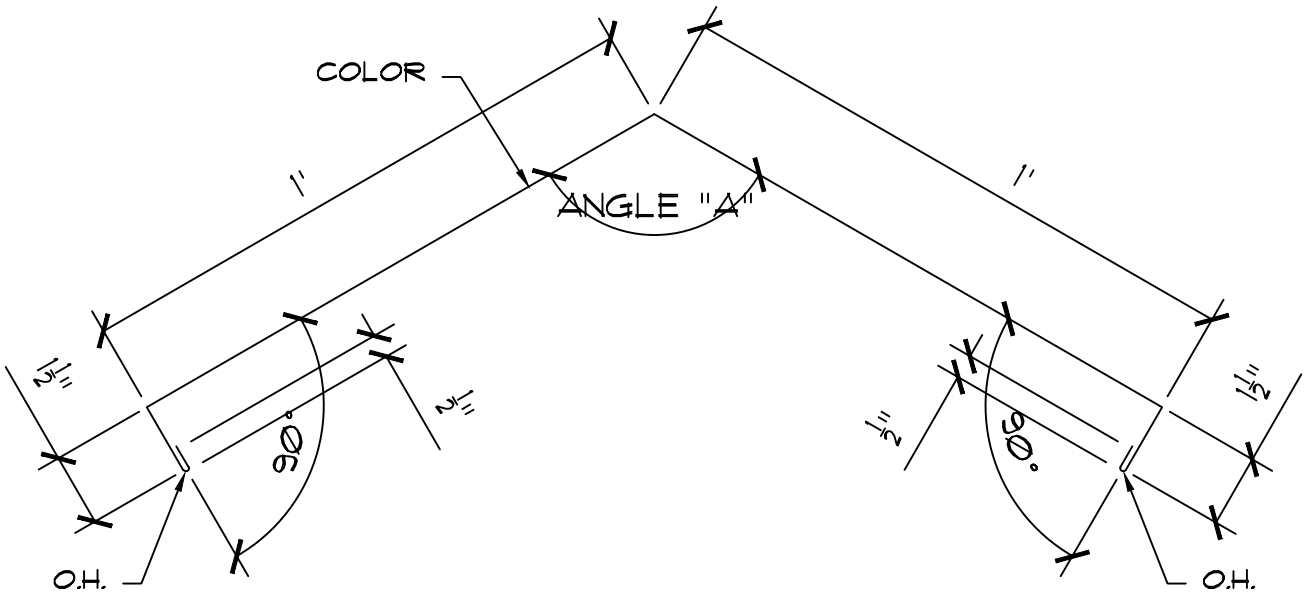

GAUGE:	STRETCH–OUT: 28"	PART #: RH172
COLOR:	# OF BREAKS: 7	PART NAME:
LENGTH: 10'-0"	QUANTITY:	VENTED FIXED RIDGE/HIP

CUSTOMER:	DRAWN BY:	AEP SPAN
JOB NAME:	DATE:	
AEPS ORDER #:	ACCEPTED BY:	
	DATE:	

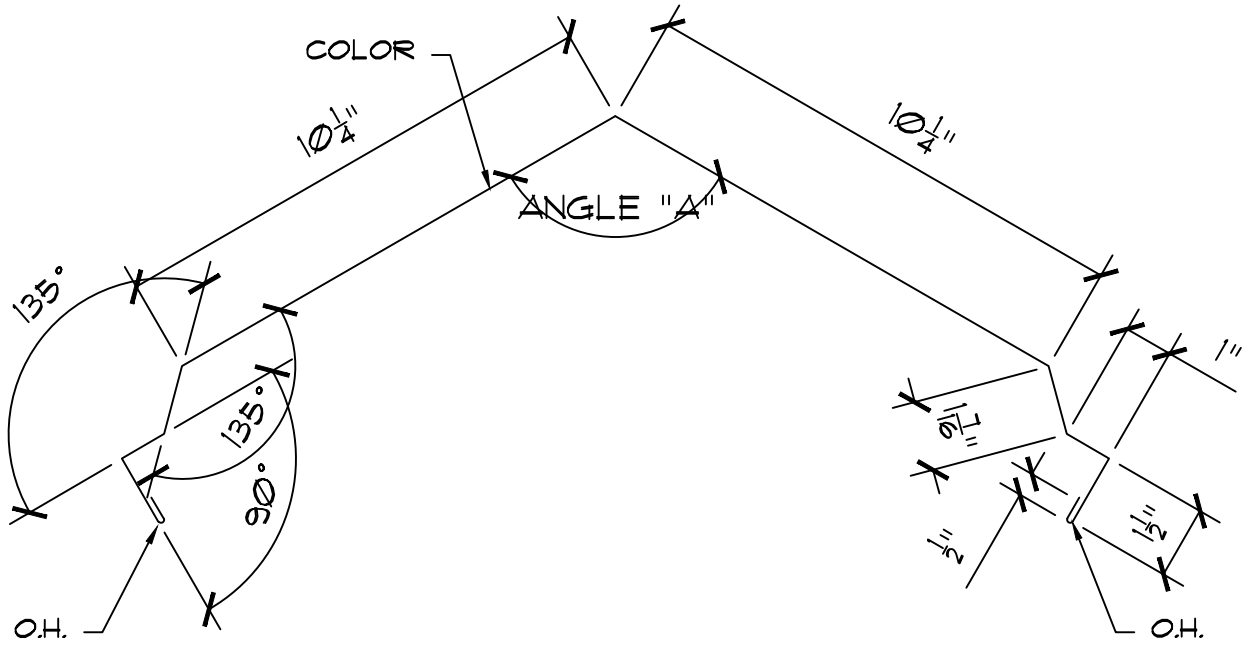

GAUGE:	STRETCH-OUT: 29 3/8"	PART #: RH174
COLOR:	# OF BREAKS: 11	PART NAME:
LENGTH: 10'-0"	QUANTITY:	VENTED RIDGE/HIP CAP

CUSTOMER:	DRAWN BY:	AEP SPAN
JOB NAME:	DATE:	
AEPS ORDER #:	ACCEPTED BY:	
	DATE:	

Return to Menu

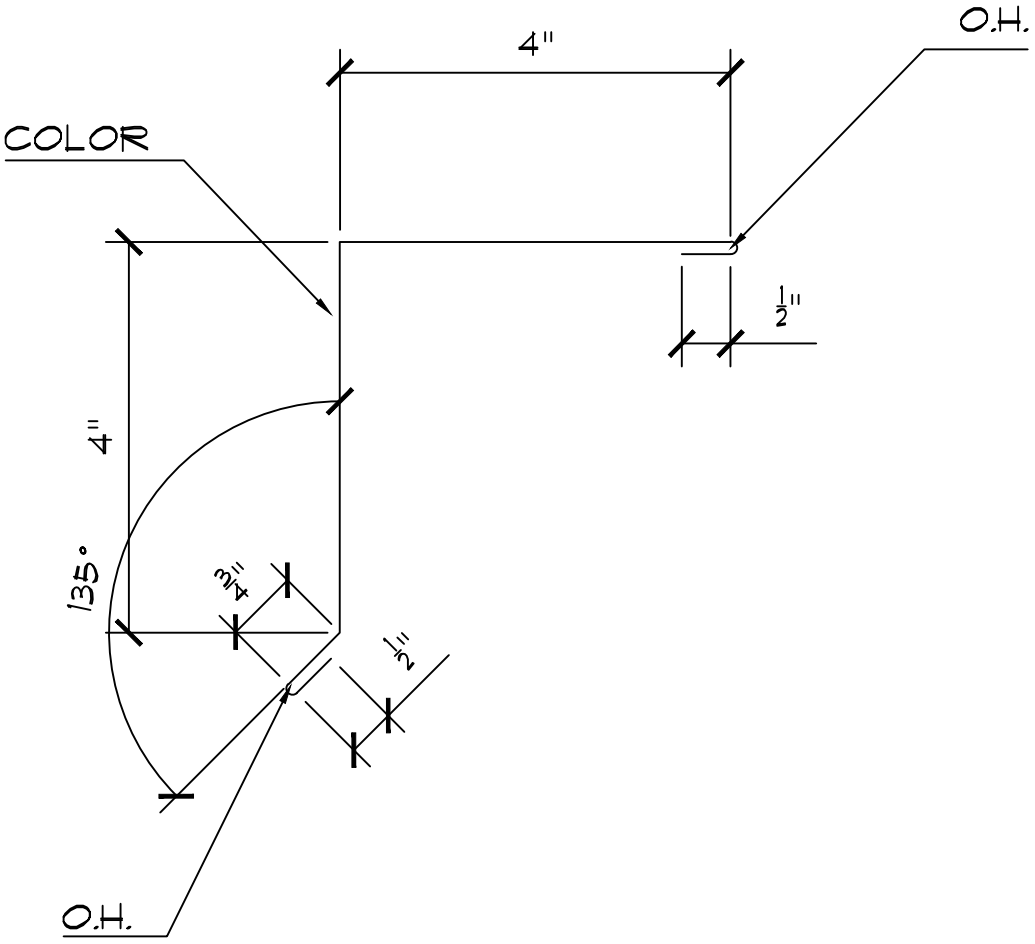

GAUGE:	STRETCH-OUT: 9 3/4"	PART #: RT175
COLOR:	# OF BREAKS: 6	PART NAME:
LENGTH: 10'-0"	QUANTITY:	SHORT RAKE TRIM

CUSTOMER:	DRAWN BY:	AEP SPAN
JOB NAME:	DATE:	
AEPS ORDER #:	ACCEPTED BY:	
	DATE:	

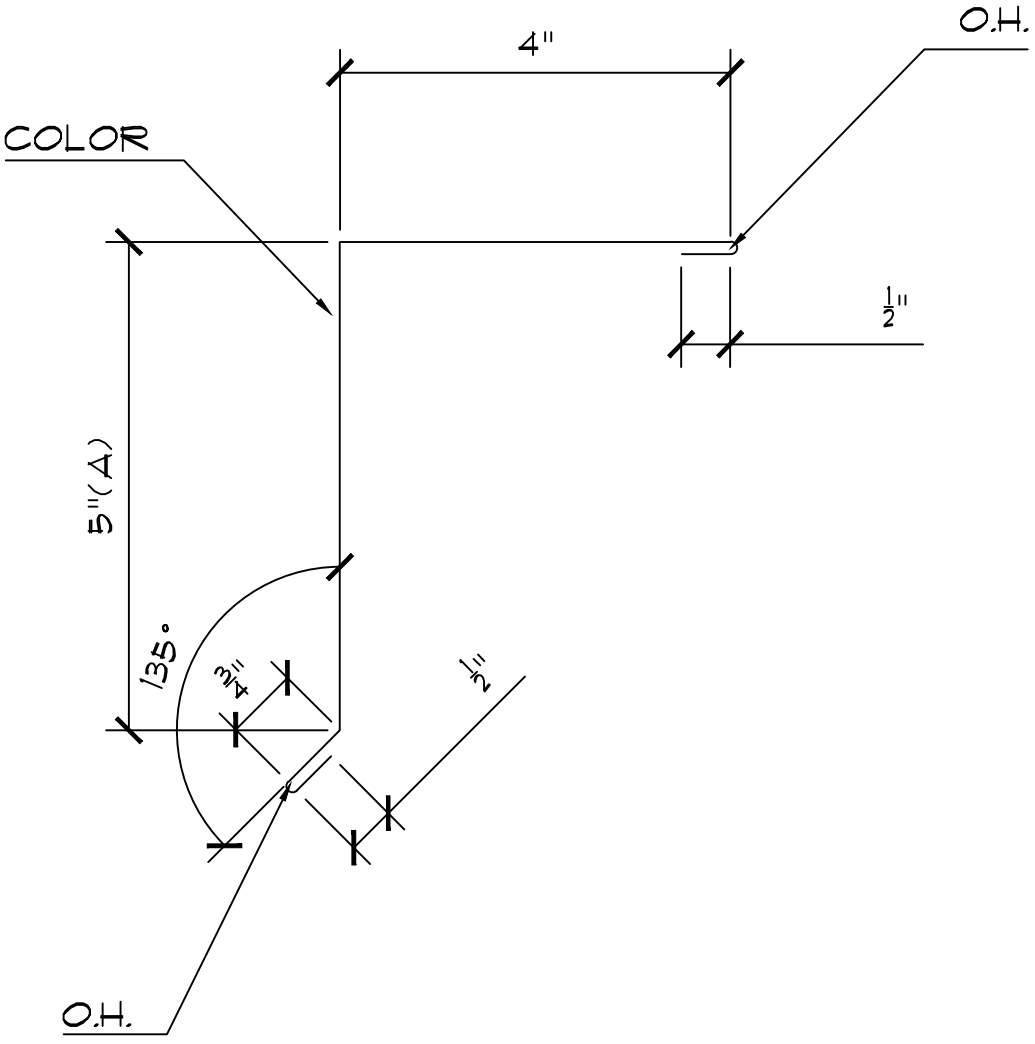

GAUGE:	STRETCH-OUT: 10 3/4"	PART #: RT177
COLOR:	# OF BREAKS: 6	PART NAME:
LENGTH: 10'-0"	QUANTITY:	LONG RAKE TRIM

CUSTOMER:	DRAWN BY:	AEP SPAN
JOB NAME:	DATE:	
AEPS ORDER #:	ACCEPTED BY:	
	DATE:	

Return to Menu

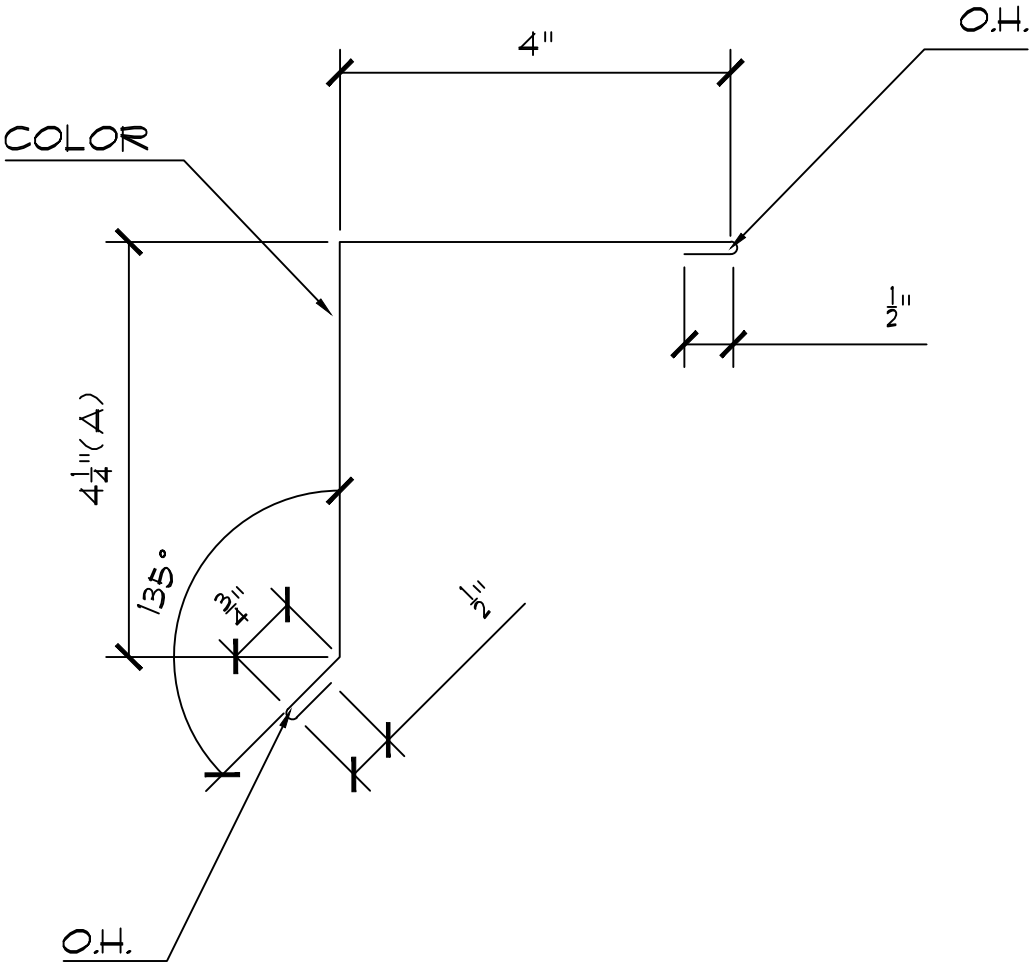

GAUGE:	STRETCH-OUT: 10"	PART #: RT179
COLOR:	# OF BREAKS: 6	PART NAME:
LENGTH: 10'-0"	QUANTITY:	SHORT RAKE TRIM

CUSTOMER:	DRAWN BY:	AEP SPAN
JOB NAME:	DATE:	
AEPS ORDER #:	ACCEPTED BY:	
	DATE:	

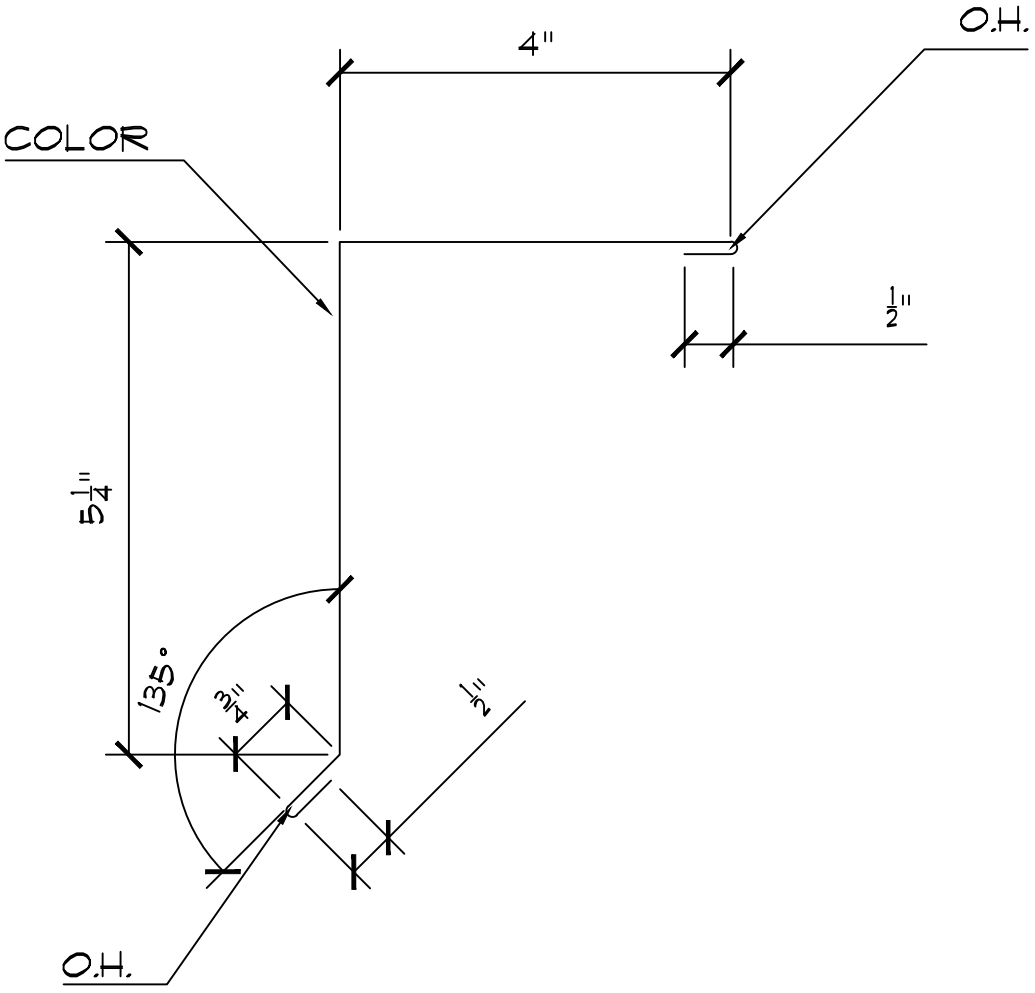

GAUGE:	STRETCH-OUT: 11"	PART #: RT181
COLOR:	# OF BREAKS: 6	PART NAME:
LENGTH: 10'-0"	QUANTITY:	LONG RAKE TRIM

CUSTOMER:	DRAWN BY:	AEP SPAN
JOB NAME:	DATE:	
AEPS ORDER #:	ACCEPTED BY:	
	DATE:	

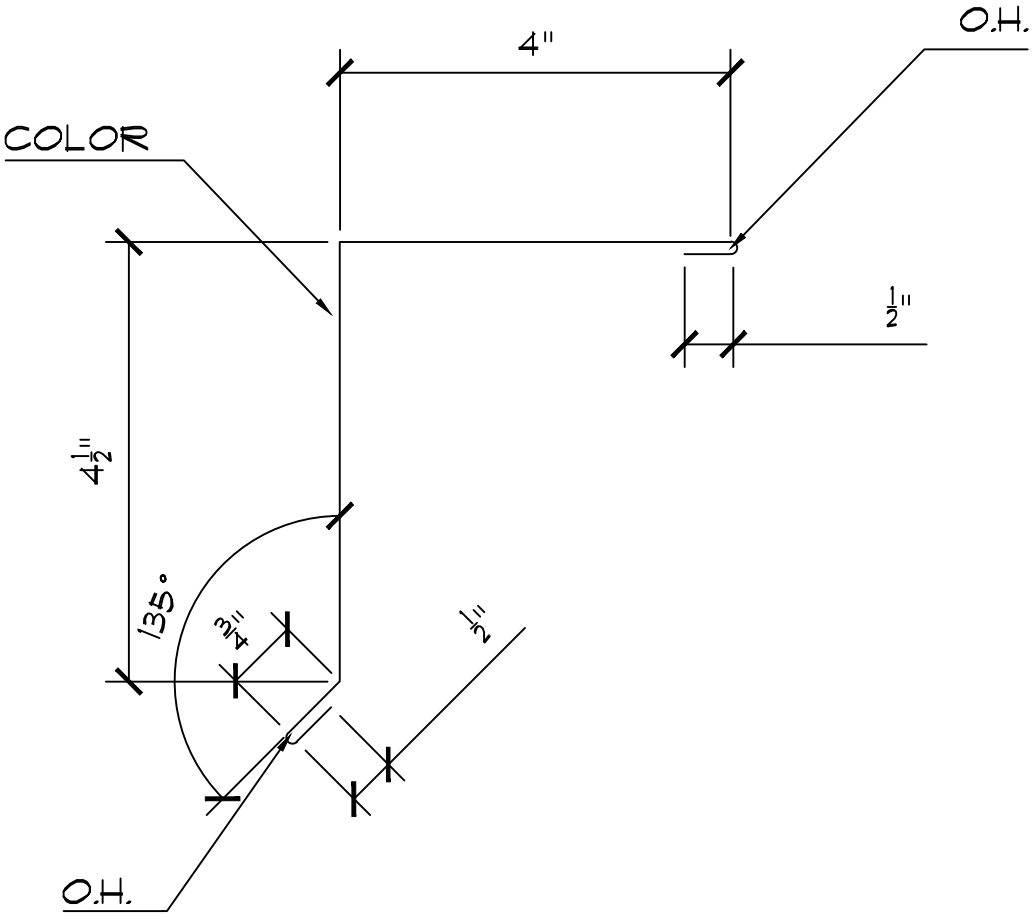

GAUGE:	STRETCH-OUT: 10 1/4"	PART #: RT183
COLOR:	# OF BREAKS: 6	PART NAME:
LENGTH: 10'-0"	QUANTITY:	SHORT RAKE TRIM

CUSTOMER:	DRAWN BY:	AEP SPAN
JOB NAME:	DATE:	
AEPS ORDER #:	ACCEPTED BY:	
	DATE:	

Return to Menu

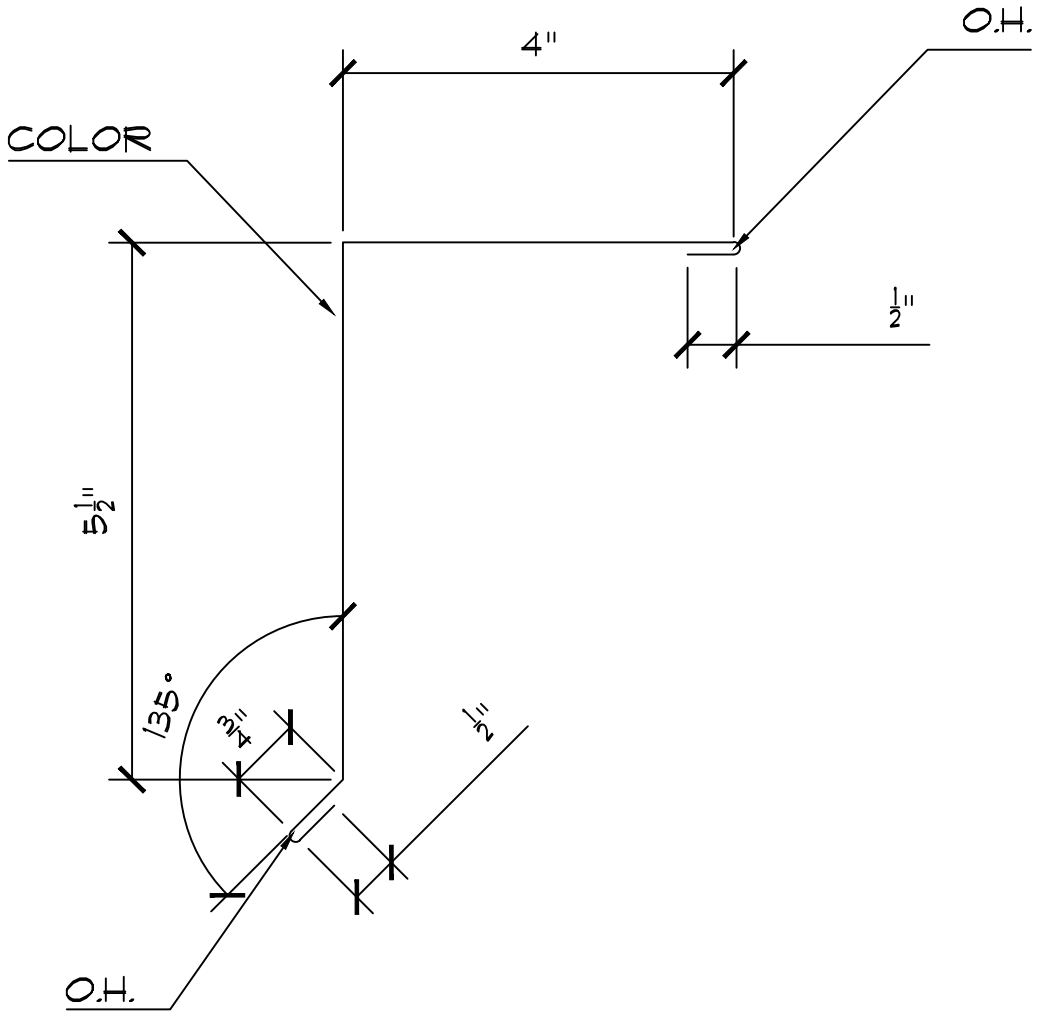

GAUGE:	STRETCH-OUT: 11 1/4"	PART #: RT185
COLOR:	# OF BREAKS: 6	PART NAME:
LENGTH: 10'-0"	QUANTITY:	LONG RAKE TRIM

CUSTOMER:	DRAWN BY:	AEP SPAN
JOB NAME:	DATE:	
AEPS ORDER #:	ACCEPTED BY:	
	DATE:	

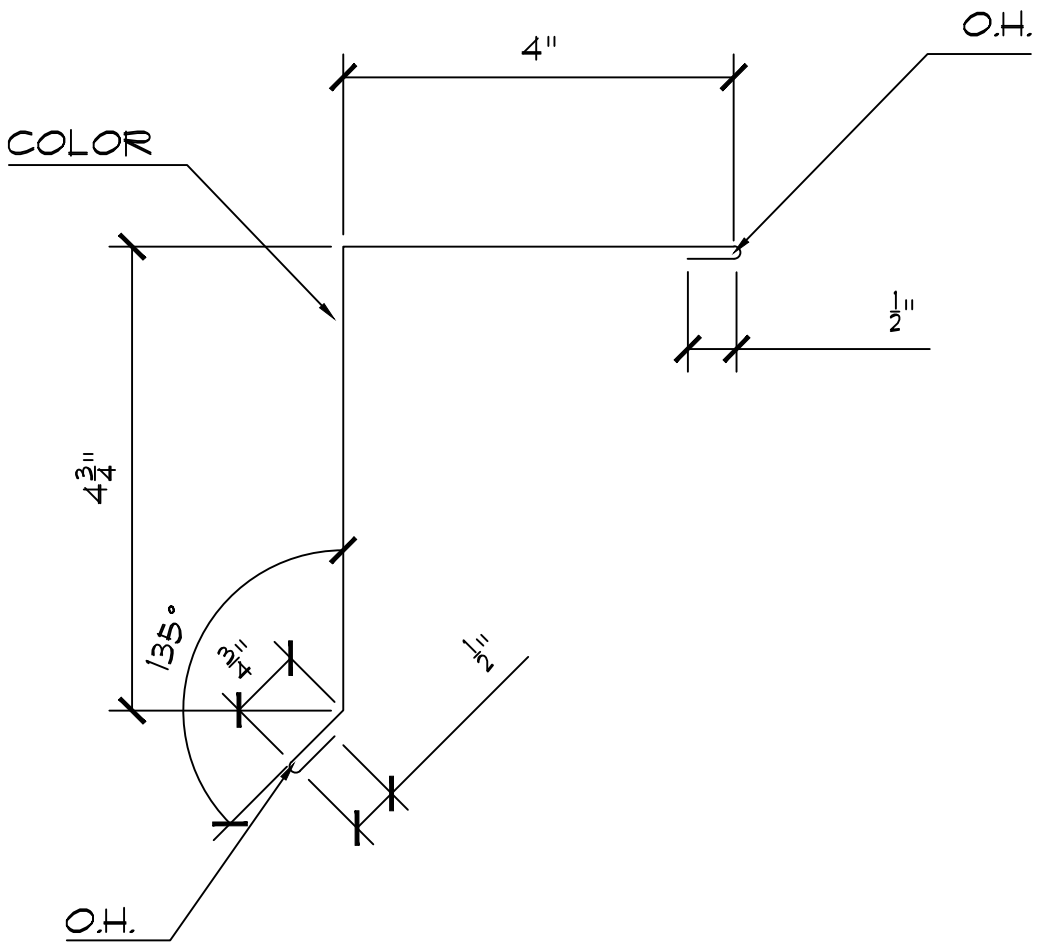

GAUGE:	STRETCH-OUT: 10 1/2"	PART #: RT187
COLOR:	# OF BREAKS: 6	PART NAME:
LENGTH: 10'-0"	QUANTITY:	SHORT RAKE TRIM

CUSTOMER:	DRAWN BY:	AEP SPAN
JOB NAME:	DATE:	
AEPS ORDER #:	ACCEPTED BY:	
	DATE:	

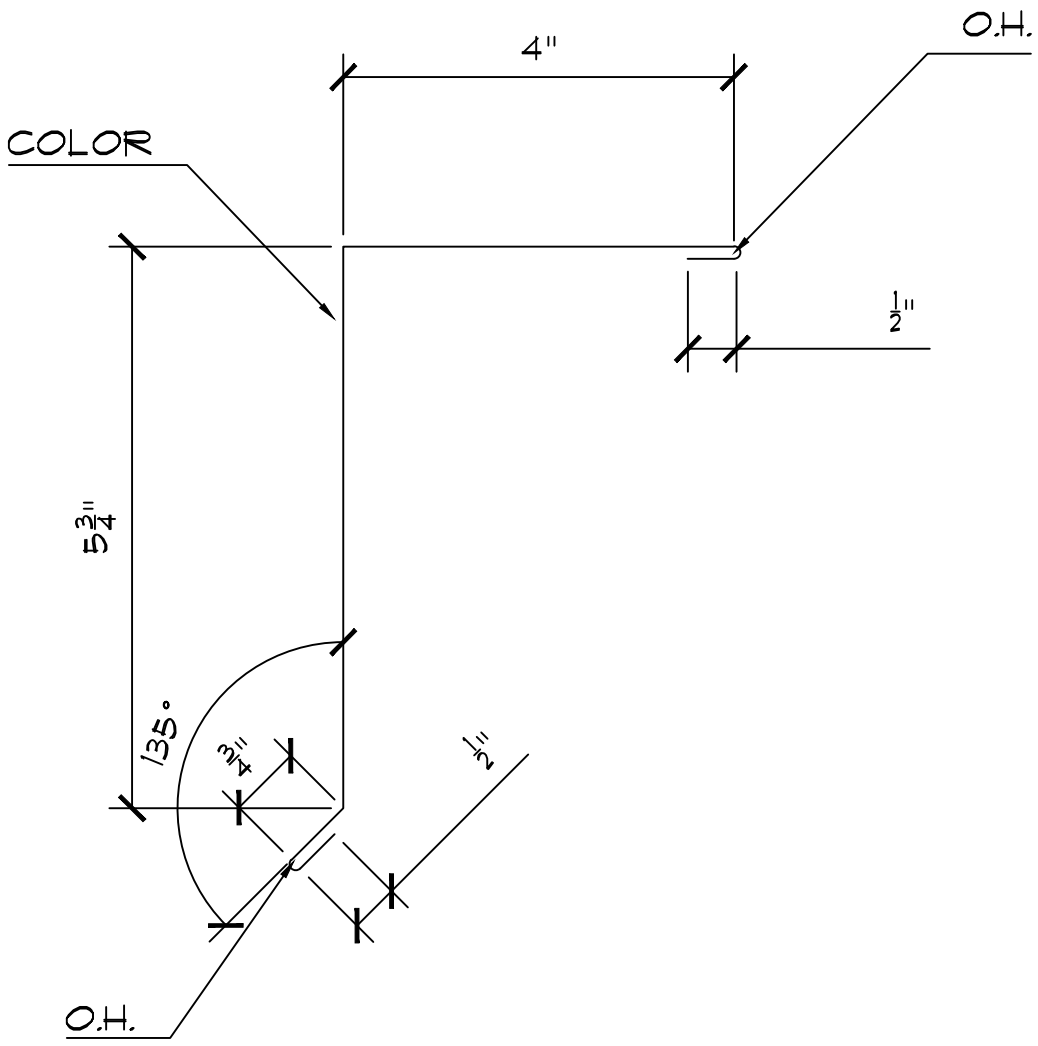

GAUGE:	STRETCH-OUT: 11 1/2"	PART #: RT189
COLOR:	# OF BREAKS: 6	PART NAME:
LENGTH: 10'-0"	QUANTITY:	LONG RAKE TRIM

CUSTOMER:	DRAWN BY:	AEP SPAN
JOB NAME:	DATE:	
AEPS ORDER #:	ACCEPTED BY:	
	DATE:	

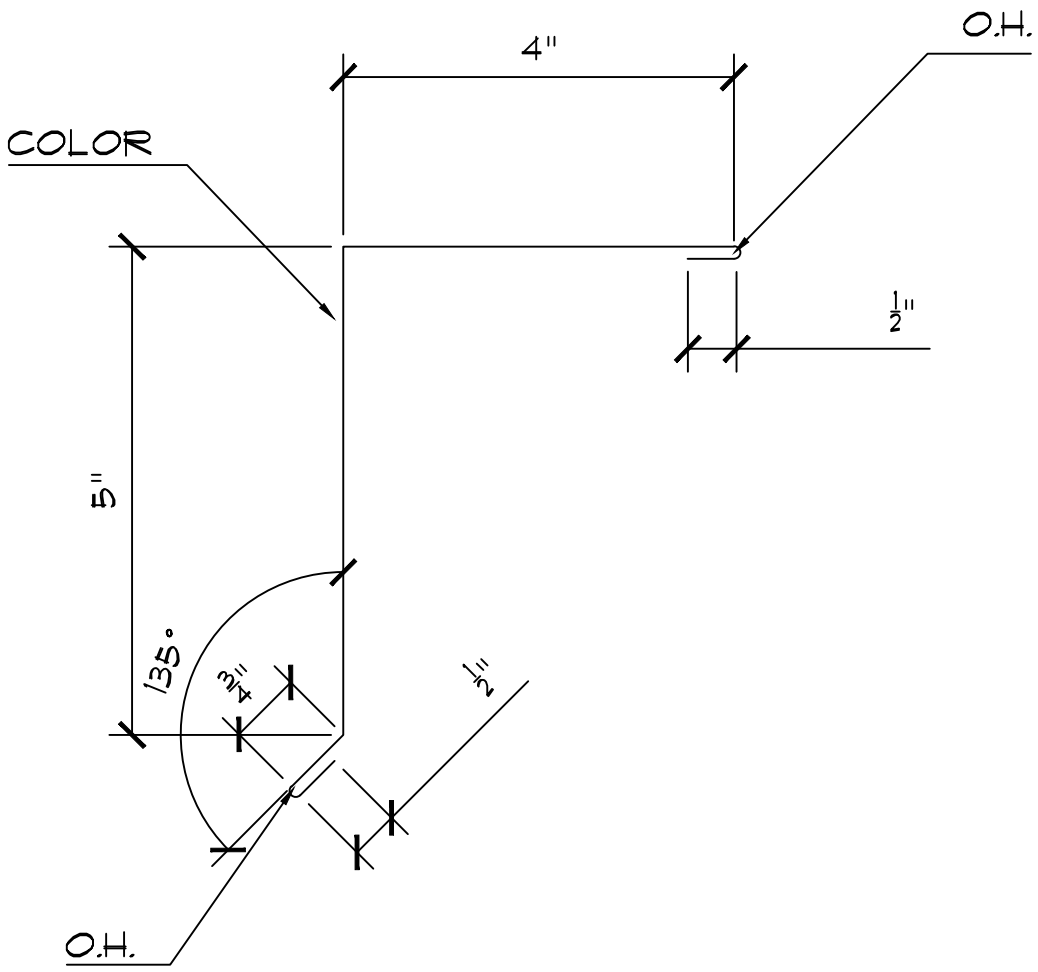

GAUGE:	STRETCH-OUT: 10 3/4"	PART #: RT191
COLOR:	# OF BREAKS: 6	PART NAME:
LENGTH: 10'-0"	QUANTITY:	SHORT RAKE TRIM

CUSTOMER:	DRAWN BY:	AEP SPAN
JOB NAME:	DATE:	
AEPS ORDER #:	ACCEPTED BY:	
	DATE:	

Return to Menu

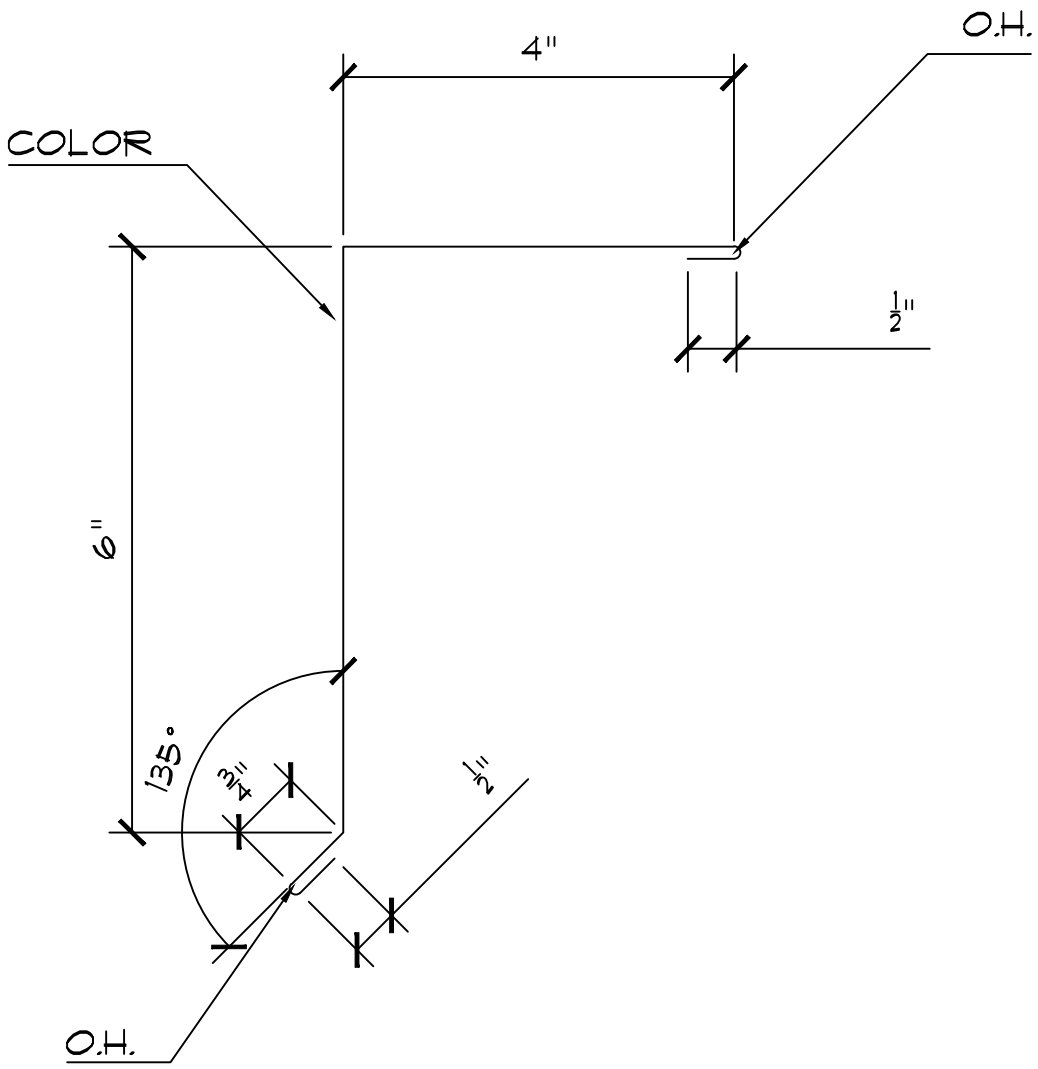

GAUGE:	STRETCH-OUT: 11 3/4"	PART #: RT193
COLOR:	# OF BREAKS: 6	PART NAME:
LENGTH: 10'-0"	QUANTITY:	LONG RAKE TRIM

CUSTOMER:	DRAWN BY:	AEP SPAN
JOB NAME:	DATE:	
AEPS ORDER #:	ACCEPTED BY:	
	DATE:	

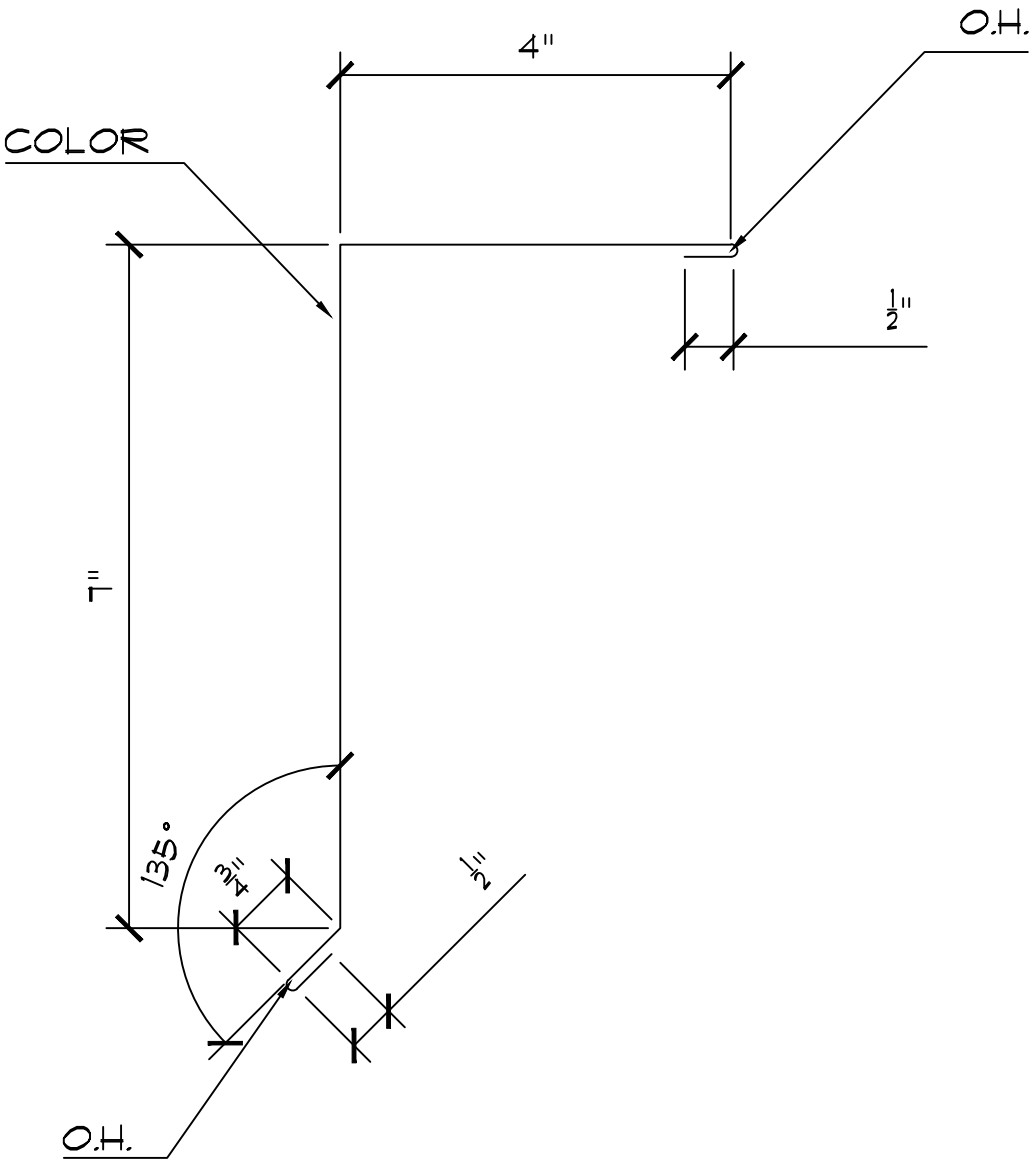

GAUGE:	STRETCH-OUT: 12 3/4"	PART #: RT195
COLOR:	# OF BREAKS: 6	PART NAME:
LENGTH: 10'-0"	QUANTITY:	LONG RAKE TRIM

CUSTOMER:	DRAWN BY:	AEP SPAN
JOB NAME:	DATE:	
AEPS ORDER #:	ACCEPTED BY:	
	DATE:	

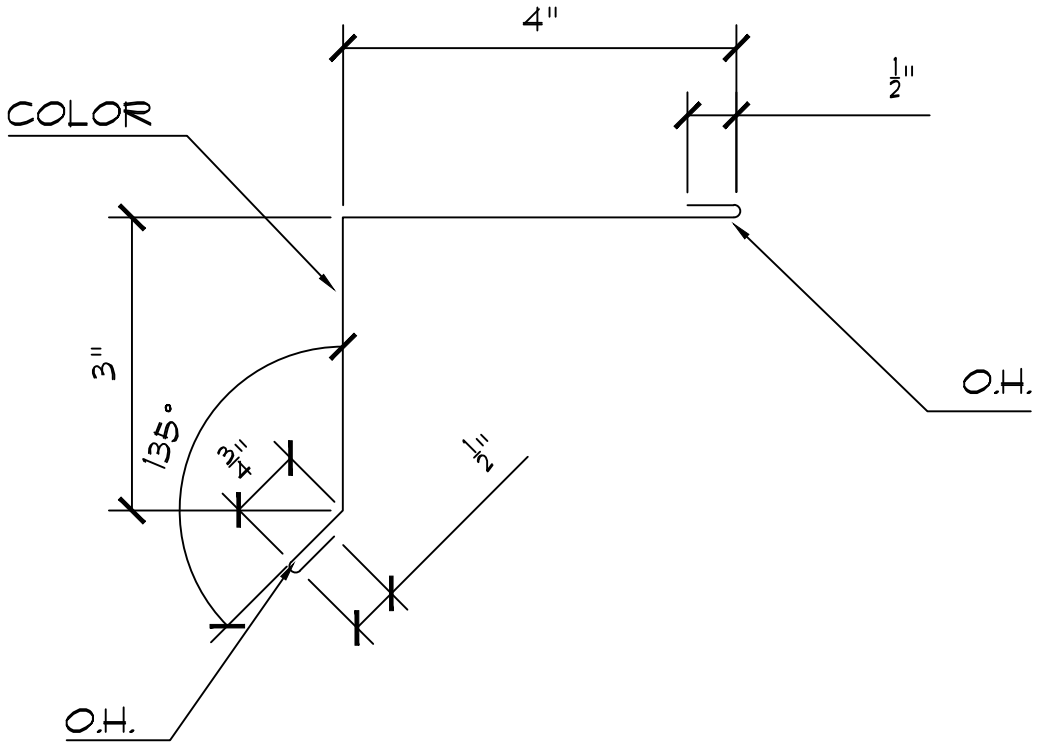

GAUGE:	STRETCH-OUT: 8 3/4"	PART #: RT197
COLOR:	# OF BREAKS: 6	PART NAME: SHORT ALT. RAKE TRIM
LENGTH: 10'-0"	QUANTITY:	

CUSTOMER:	DRAWN BY:	AEP SPAN
JOB NAME:	DATE:	
AEPS ORDER #:	ACCEPTED BY:	
	DATE:	

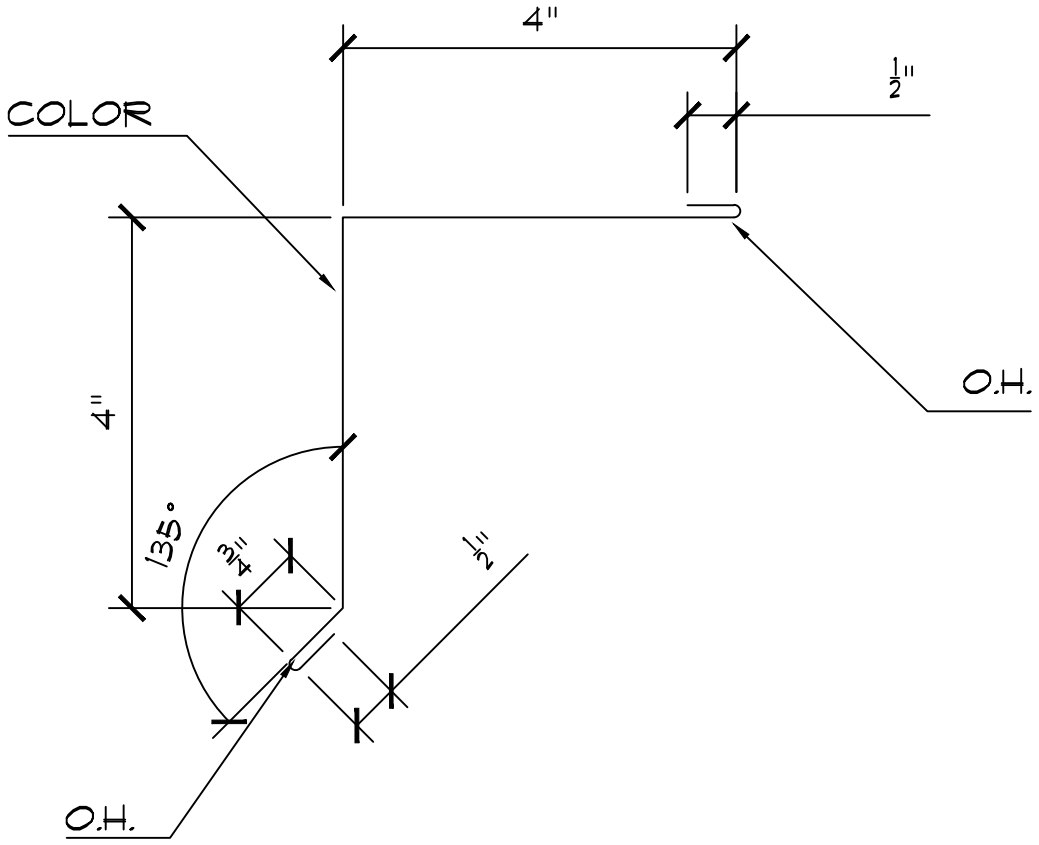

GAUGE:	STRETCH-OUT: 9 3/4"	PART #: RT199
COLOR:	# OF BREAKS: 6	PART NAME:
LENGTH: 10'-0"	QUANTITY:	LONG ALT. RAKE TRIM

CUSTOMER:	DRAWN BY:	AEP SPAN
JOB NAME:	DATE:	
AEPS ORDER #:	ACCEPTED BY:	
	DATE:	

Return to Menu

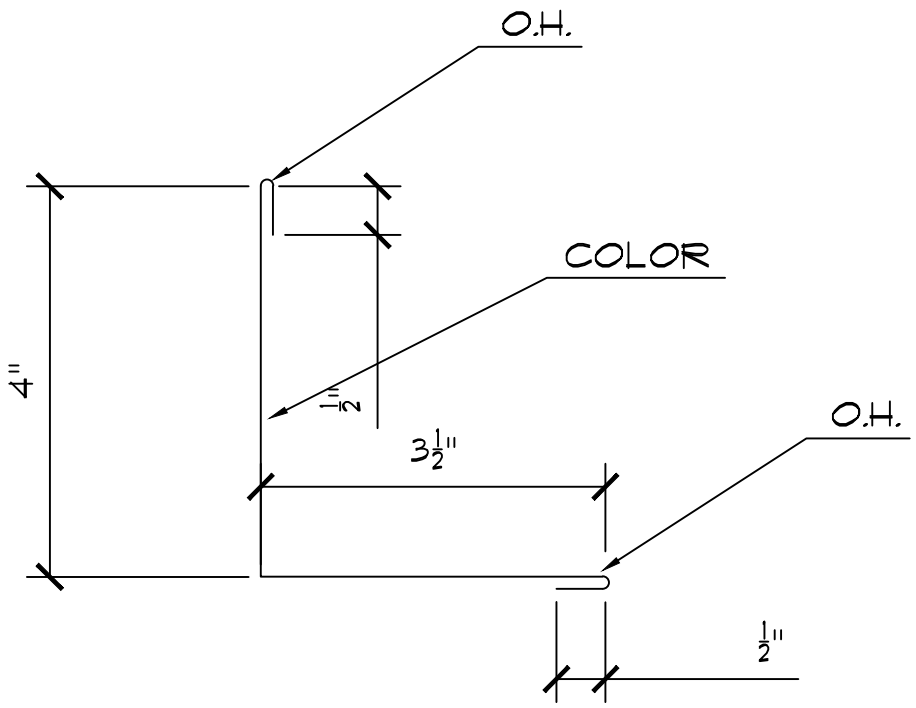

GAUGE:	STRETCH–OUT: 8 1/2"	PART #: RW201
COLOR:	# OF BREAKS: 5	PART NAME: RAKEWALL TRIM
LENGTH: 10'-0"	QUANTITY:	

CUSTOMER:	DRAWN BY:	AEP SPAN
JOB NAME:	DATE:	
AEPS ORDER #:	ACCEPTED BY:	
	DATE:	

Return to Menu

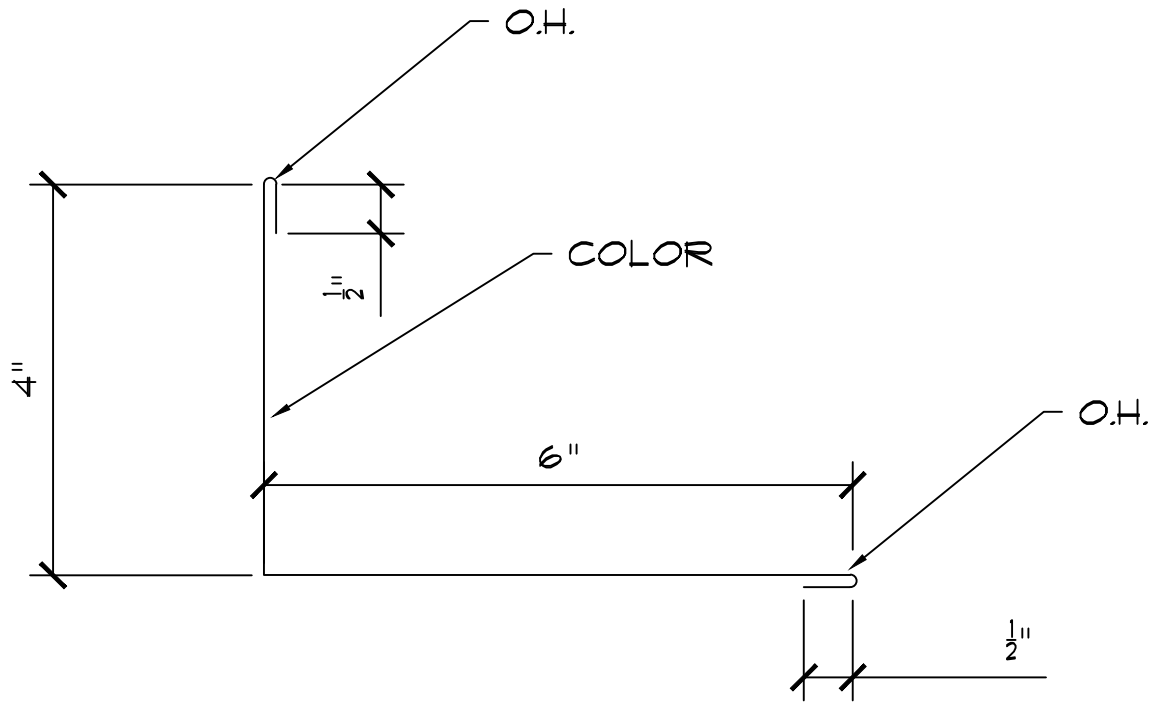

GAUGE:	STRETCH-OUT: 11"	PART #: RW203
COLOR:	# OF BREAKS: 5	PART NAME:
LENGTH: 10'-0"	QUANTITY:	RAKEWALL TRIM

CUSTOMER:	DRAWN BY:	AEP SPAN
JOB NAME:	DATE:	
AEPS ORDER #:	ACCEPTED BY:	
	DATE:	

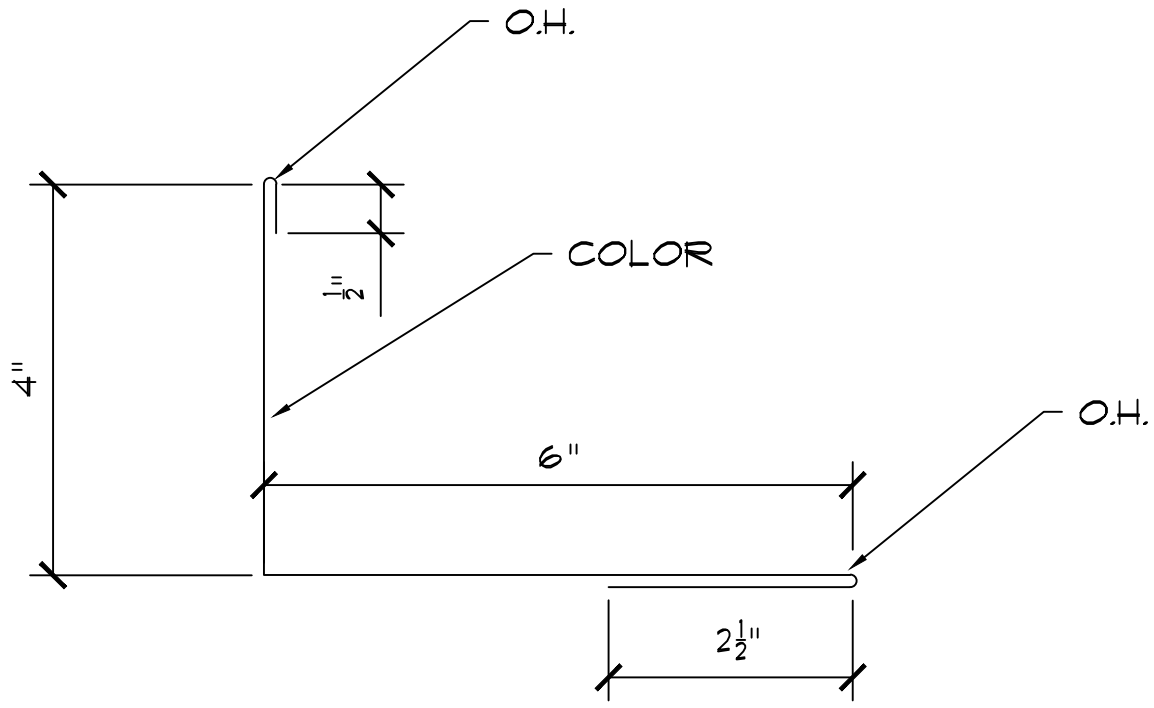

GAUGE:	STRETCH-OUT: 13"	PART #: RW205
COLOR:	# OF BREAKS: 5	PART NAME:
LENGTH: 10'-0"	QUANTITY:	EXP RAKWALL TRIM

CUSTOMER:	DRAWN BY:	AEP SPAN
JOB NAME:	DATE:	
AEPS ORDER #:	ACCEPTED BY:	
	DATE:	

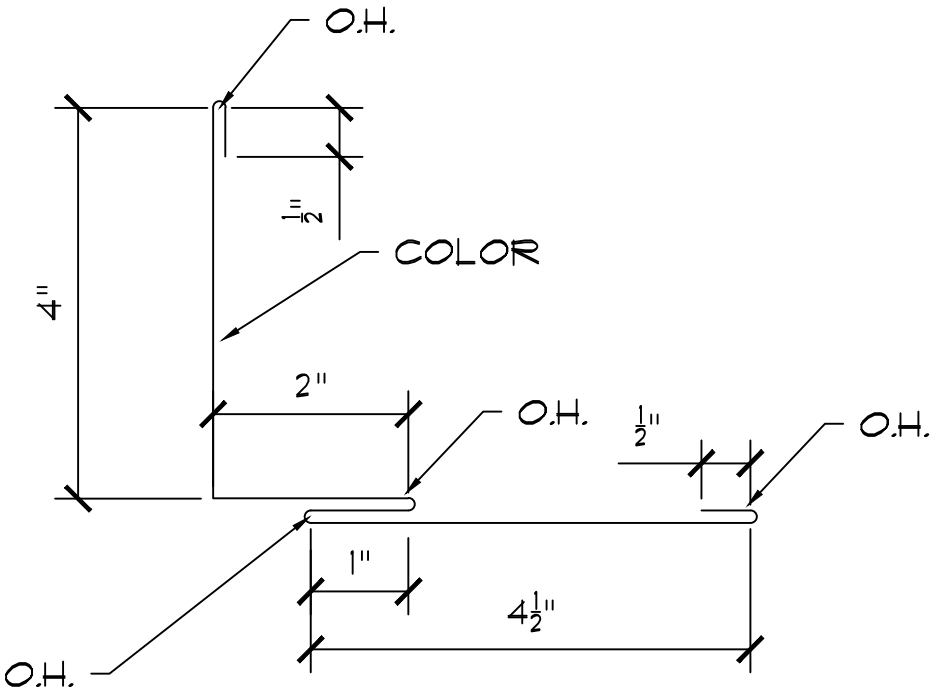

GAUGE:	STRETCH-OUT: 12 1/2"	PART #: RW207
COLOR:	# OF BREAKS: 9	PART NAME:
LENGTH: 10'-0"	QUANTITY:	RAKEWALL TRIM

CUSTOMER:	DRAWN BY:	AEP SPAN
JOB NAME:	DATE:	
AEPS ORDER #:	ACCEPTED BY:	
	DATE:	

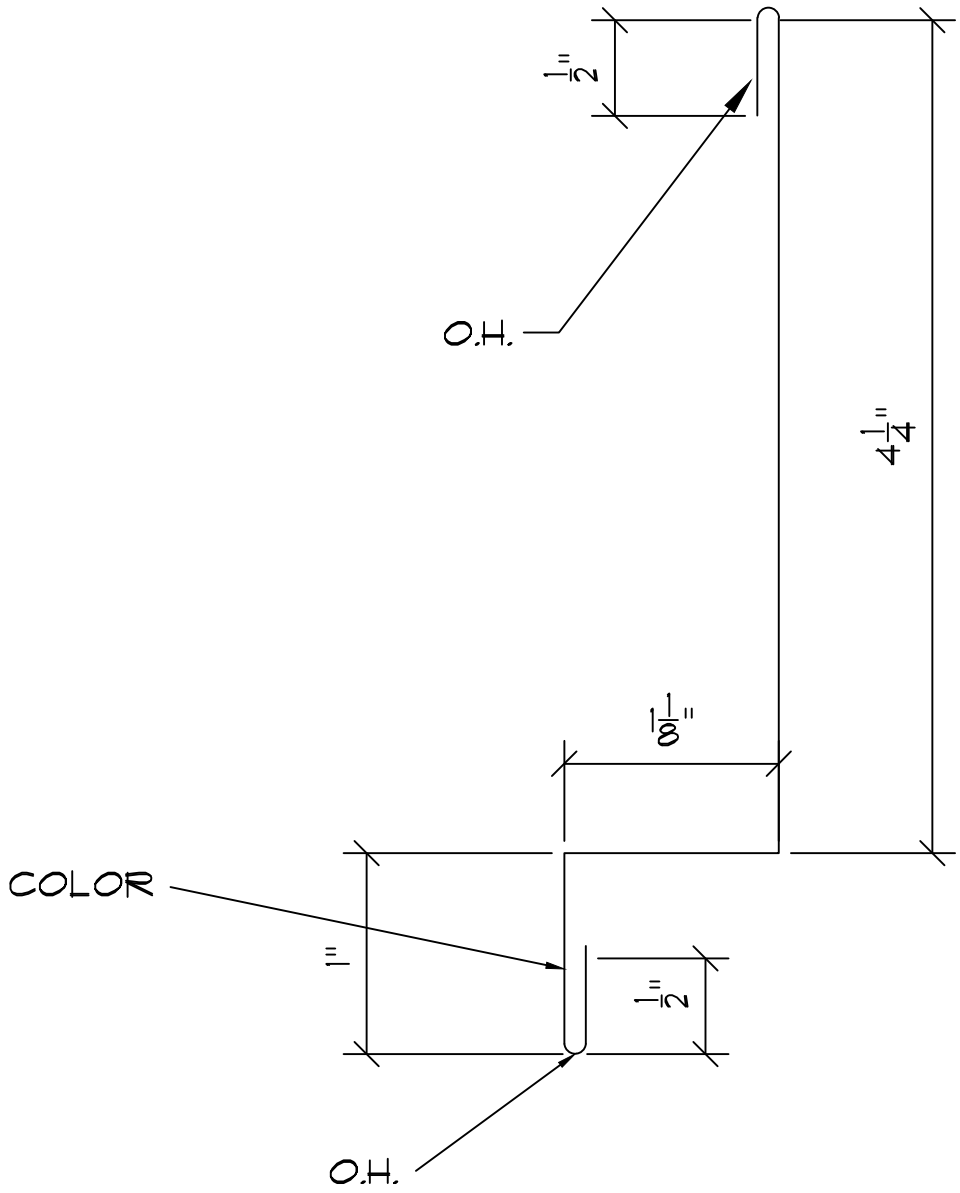

GAUGE:	STRETCH-OUT: 7 3/8"	PART #: RW209
COLOR:	# OF BREAKS: 6	PART NAME:
LENGTH: 10'-0"	QUANTITY:	RAKE TO WALL

CUSTOMER:	DRAWN BY:	AEP SPAN
JOB NAME:	DATE:	
AEPS ORDER #:	ACCEPTED BY:	
	DATE:	

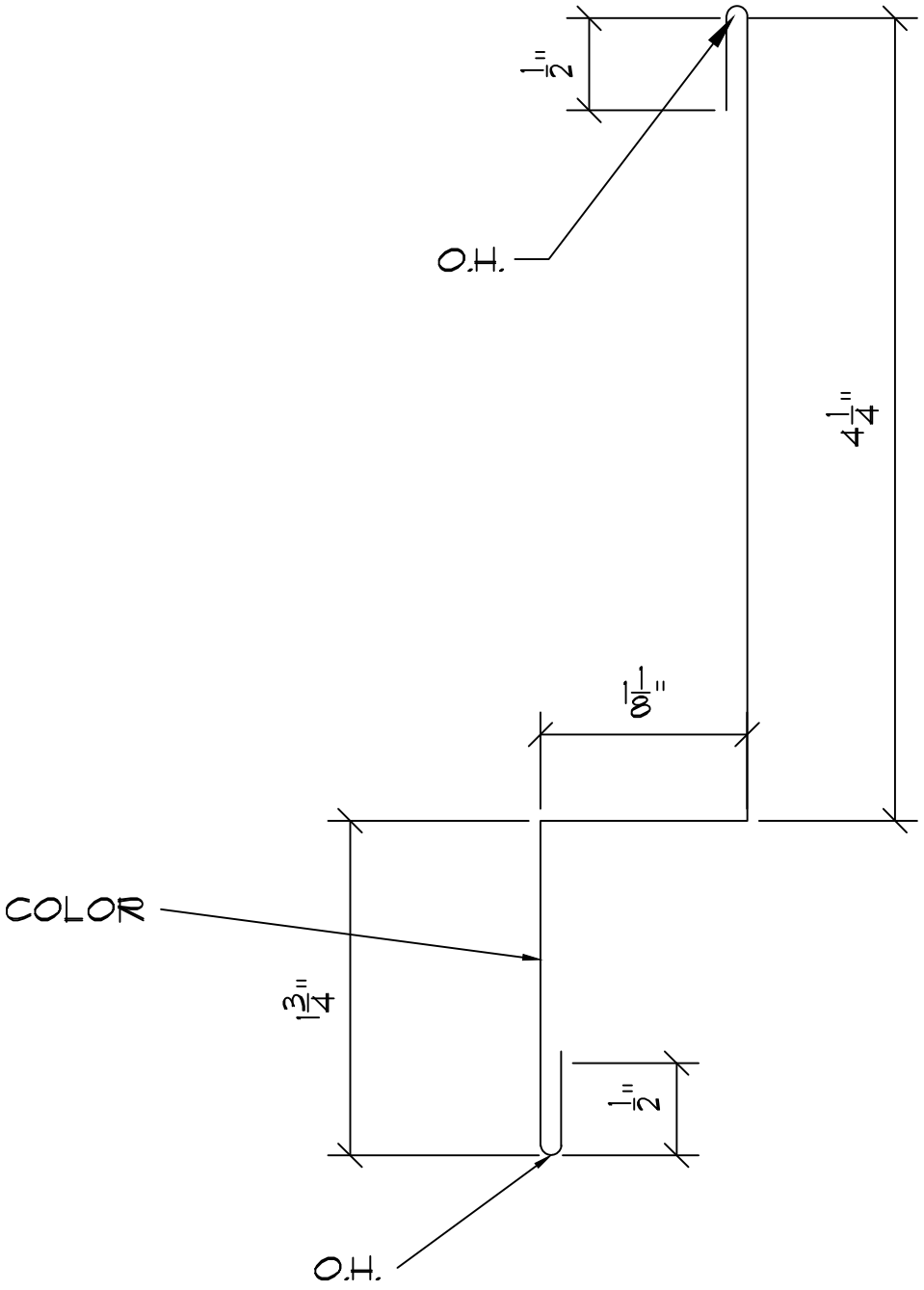

GAUGE:	STRETCH-OUT: 8 1/8"	PART #: RW212
COLOR:	# OF BREAKS: 6	PART NAME:
LENGTH: 10'-0"	QUANTITY:	RAKE TO WALL

CUSTOMER:	DRAWN BY:	AEP SPAN
JOB NAME:	DATE:	
AEPS ORDER #:	ACCEPTED BY:	
	DATE:	

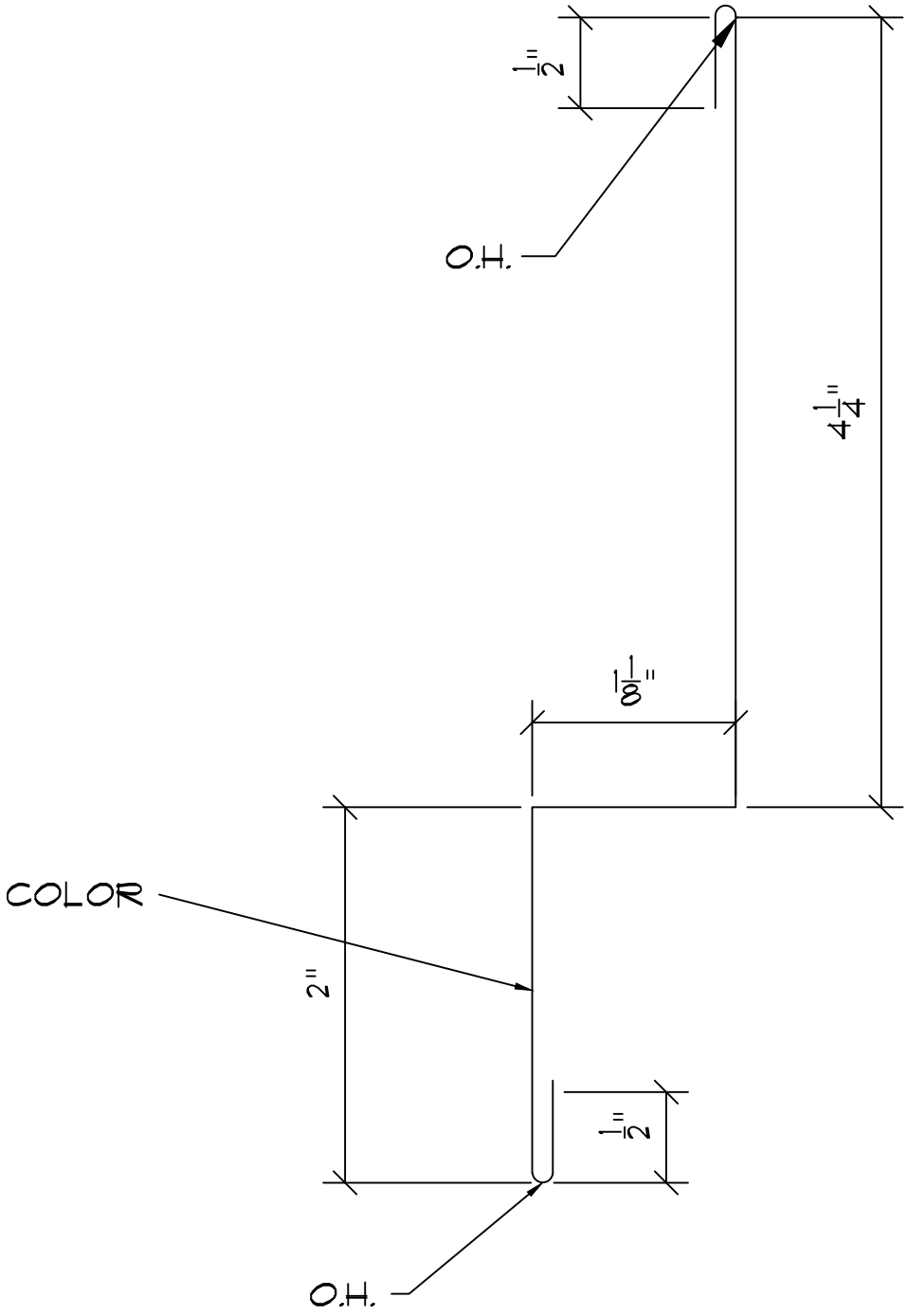

GAUGE:	STRETCH-OUT: 8 3/8"	PART #: RW213
COLOR:	# OF BREAKS: 6	PART NAME:
LENGTH: 10'-0"	QUANTITY:	RAKE TO WALL

CUSTOMER:	DRAWN BY:	AEP SPAN
JOB NAME:	DATE:	
AEPS ORDER #:	ACCEPTED BY:	
	DATE:	

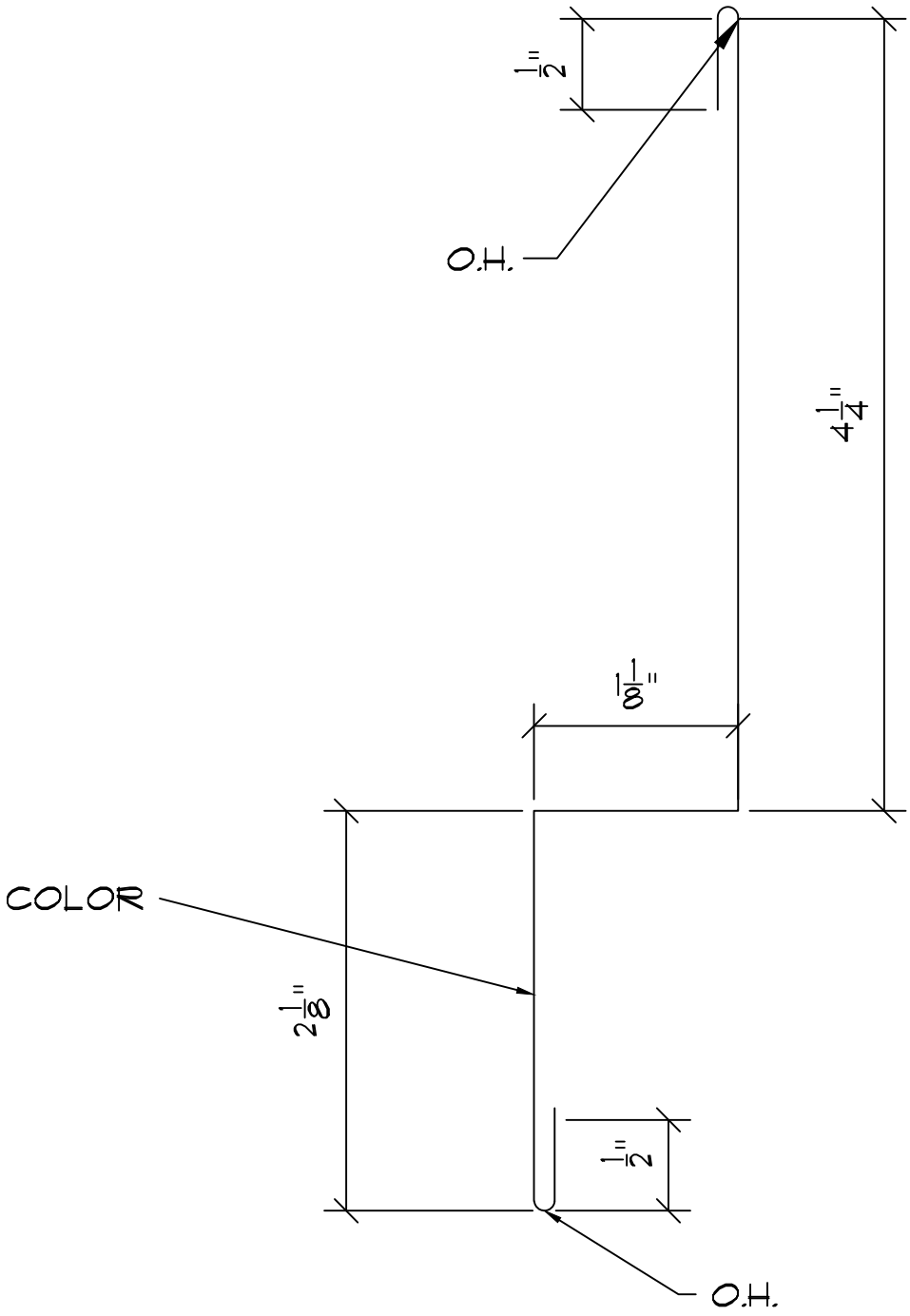

GAUGE:	STRETCH-OUT: 8 1/2"	PART #: RW215
COLOR:	# OF BREAKS: 6	PART NAME:
LENGTH: 10'-0"	QUANTITY:	RAKE TO WALL

CUSTOMER:	DRAWN BY:	AEP SPAN
JOB NAME:	DATE:	
AEPS ORDER #:	ACCEPTED BY:	
	DATE:	

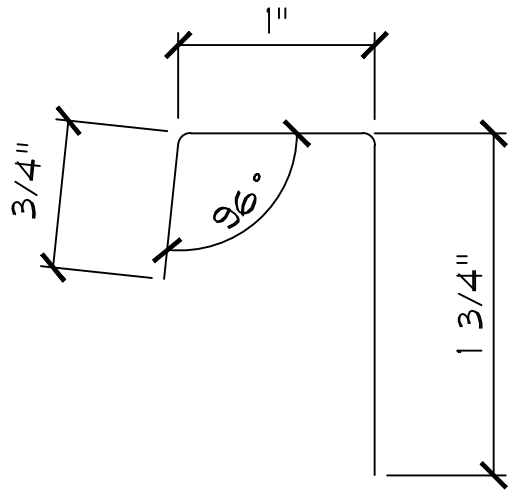

S.O. = 3 1/2"
OUTSIDE
(SL2RCO2)

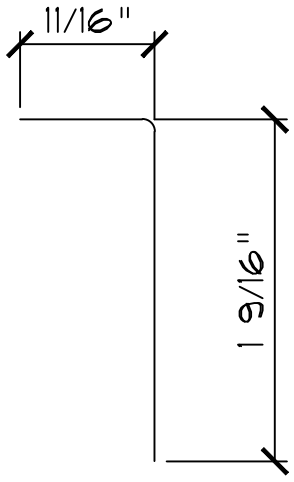

S.O. = 2 3/8"
INSIDE
(SL2RCI2)

GAUGE:	STRETCH-OUT:	PART #: SL2RC__2
COLOR:	# OF BREAKS: 2	PART NAME:
LENGTH: 0'-8"	QUANTITY:	2" SPAN-LOK RIB COVER

CUSTOMER:	DRAWN BY:	AEP SPAN
JOB NAME:	DATE:	
AEPS ORDER #:	ACCEPTED BY:	
	DATE:	

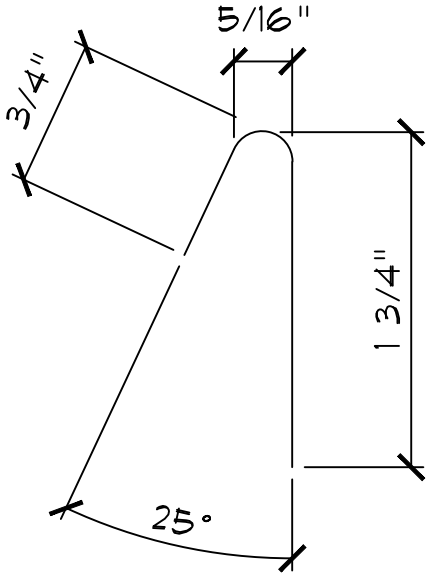

S.O. = 2 13/16"
OUTSIDE
(SPS2RC02)

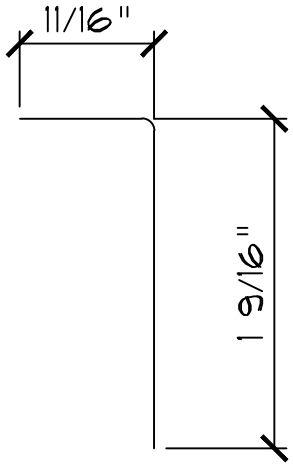

S.O. = 2 3/8"
INSIDE
(SPS2RC12)

GAUGE:	STRETCH-OUT:	PART #: SPS2RC_2
COLOR:	# OF BREAKS: 2	PART NAME:
LENGTH: 0'-8"	QUANTITY:	2" SPAN-SEAM RIB COVER

CUSTOMER:	DRAWN BY:	AEP SPAN
JOB NAME:	DATE:	
AEPS ORDER #:	ACCEPTED BY:	
	DATE:	

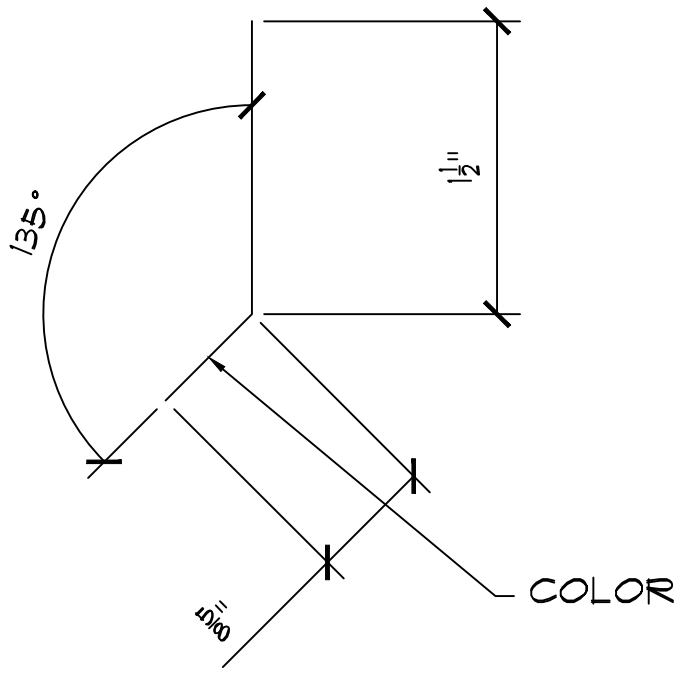

GAUGE:	STRETCH-OUT: 2 1/8"	PART #: TC209
COLOR:	# OF BREAKS: 1	PART NAME:
LENGTH: 10'-0"	QUANTITY:	TRIM CLEAT

CUSTOMER:	DRAWN BY:	AEP SPAN
JOB NAME:	DATE:	
AEPS ORDER #:	ACCEPTED BY:	
	DATE:	

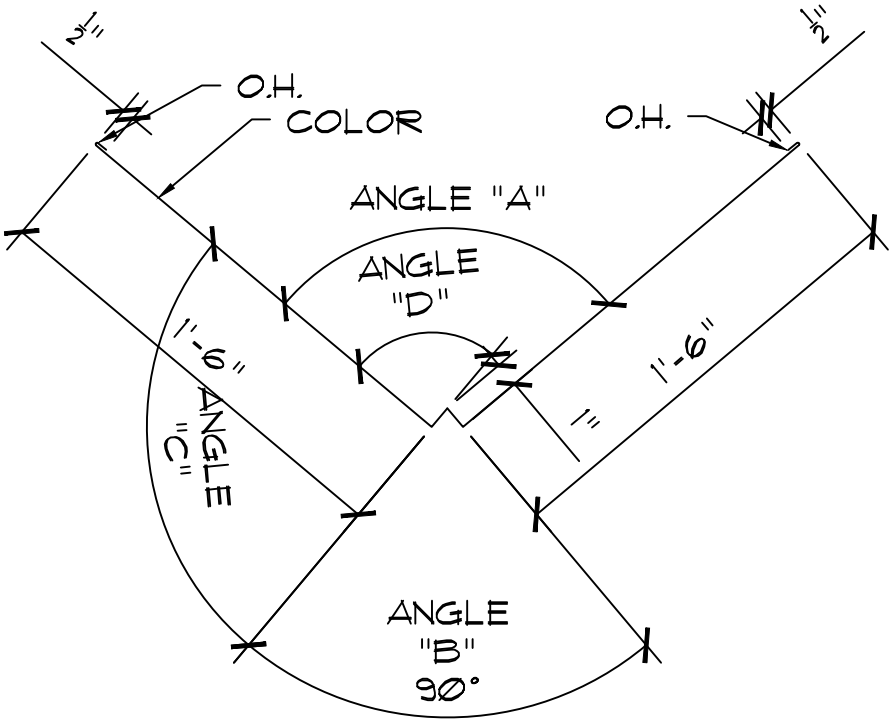

GAUGE:	STRETCH-OUT: 39"	PART #: VF210
COLOR:	# OF BREAKS: 7	PART NAME:
LENGTH: 10'-0"	QUANTITY:	VALLEY FLASHING

CUSTOMER:	DRAWN BY:	AEP SPAN
JOB NAME:	DATE:	
AEPS ORDER #:	ACCEPTED BY:	
	DATE:	

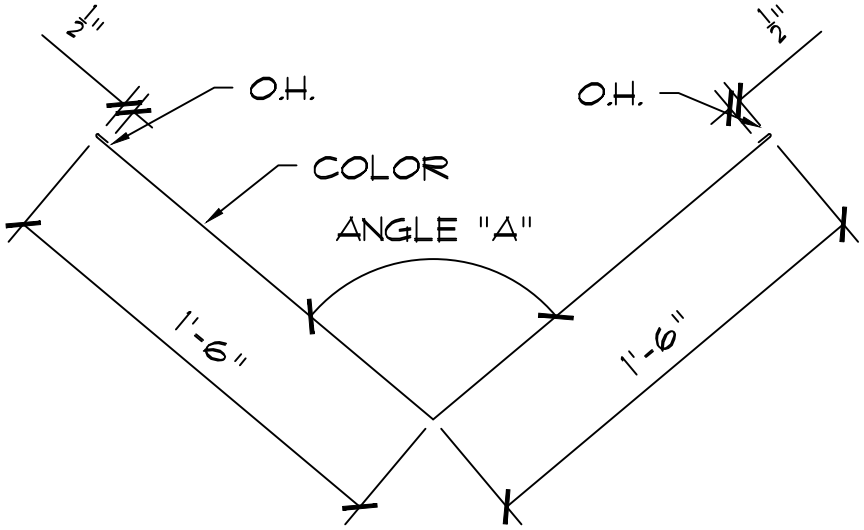

GAUGE:	STRETCH-OUT: 37"	PART #: VF212
COLOR:	# OF BREAKS: 5	PART NAME:
LENGTH: 10'-0"	QUANTITY:	VALLEY FLASHING

CUSTOMER:	DRAWN BY:	AEP SPAN
JOB NAME:	DATE:	
AEPS ORDER #:	ACCEPTED BY:	
	DATE:	

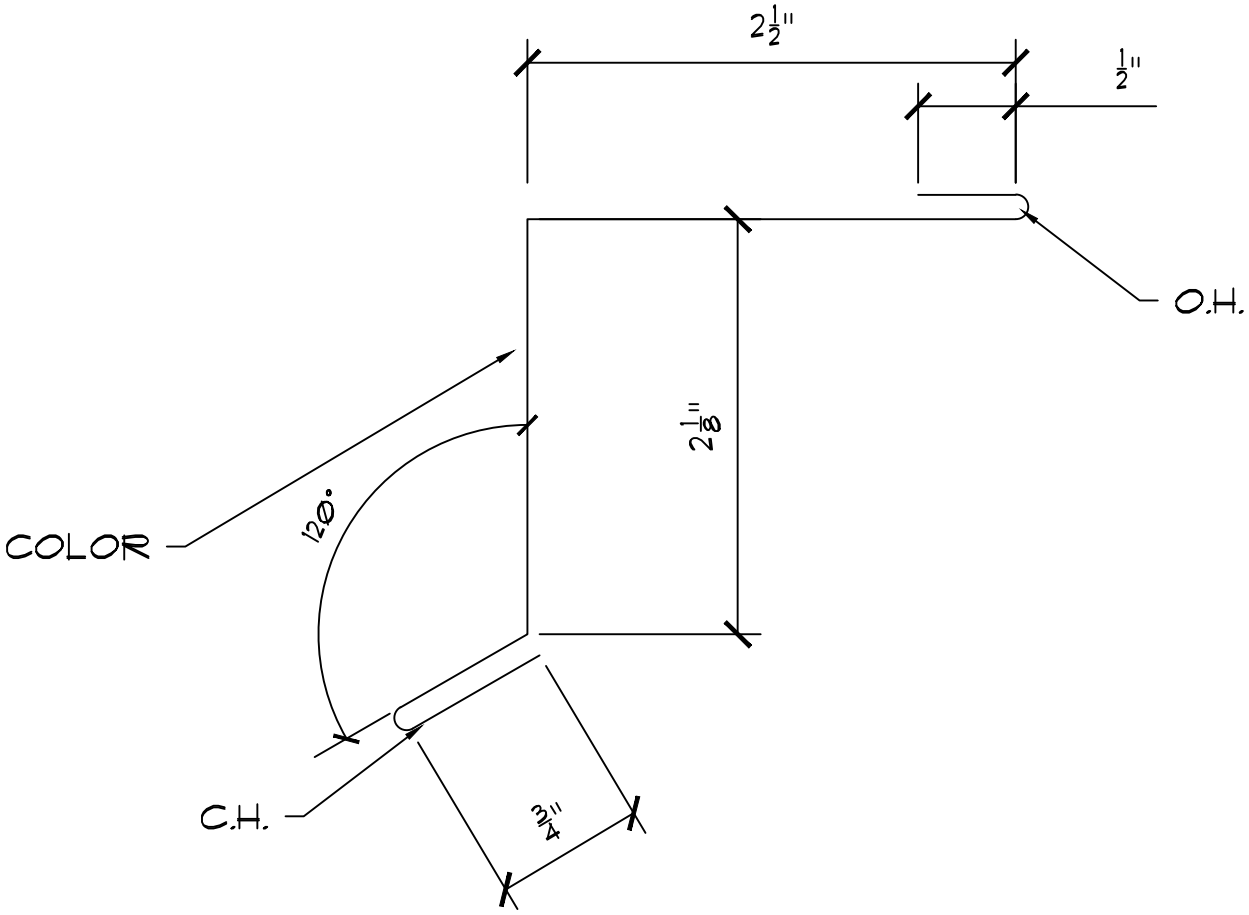

GAUGE:	STRETCH-OUT: 6 5/8"	PART #: VT214
COLOR:	# OF BREAKS: 6	PART NAME:
LENGTH: 10'-0"	QUANTITY:	EAVE VENT TRIM

CUSTOMER:	DRAWN BY:	AEP SPAN
JOB NAME:	DATE:	
AEPS ORDER #:	ACCEPTED BY:	
	DATE:	

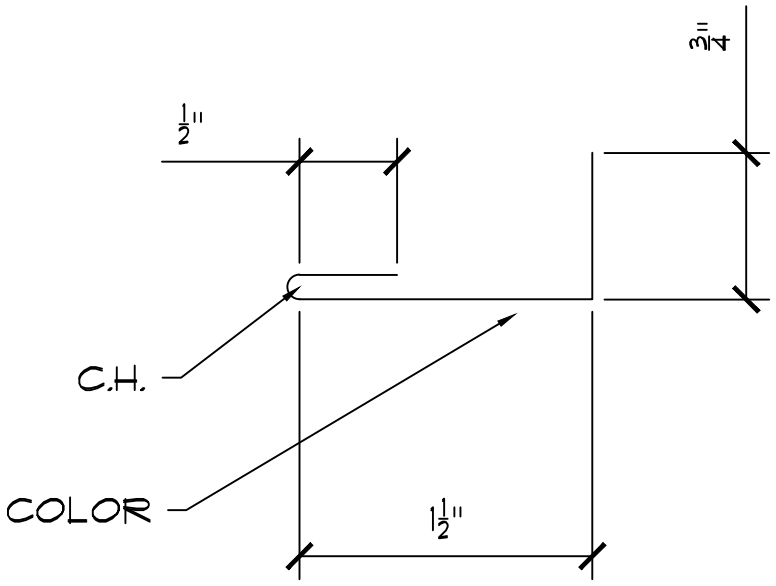

GAUGE:	STRETCH-OUT: 2 3/4"	PART #: WC215
COLOR:	# OF BREAKS: 3	PART NAME:
LENGTH: 10'-0"	QUANTITY:	WALL CLOSURE

CUSTOMER:	DRAWN BY:	AEP SPAN
JOB NAME:	DATE:	
AEPS ORDER #:	ACCEPTED BY:	
	DATE:	

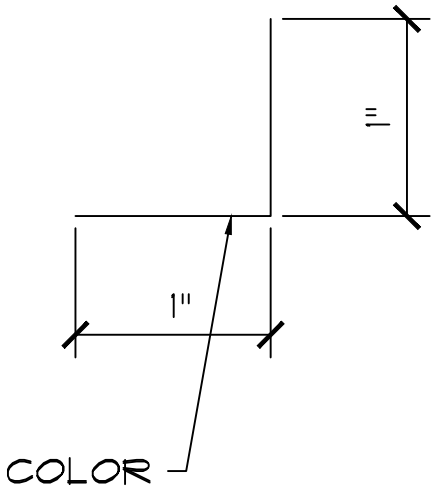

GAUGE:	STRETCH-OUT: 2"	PART #: WC216
COLOR:	# OF BREAKS: 1	PART NAME:
LENGTH: 10'-0"	QUANTITY:	COVER TRIM

CUSTOMER:	DRAWN BY:	AEP SPAN
JOB NAME:	DATE:	
AEPS ORDER #:	ACCEPTED BY:	
	DATE:	

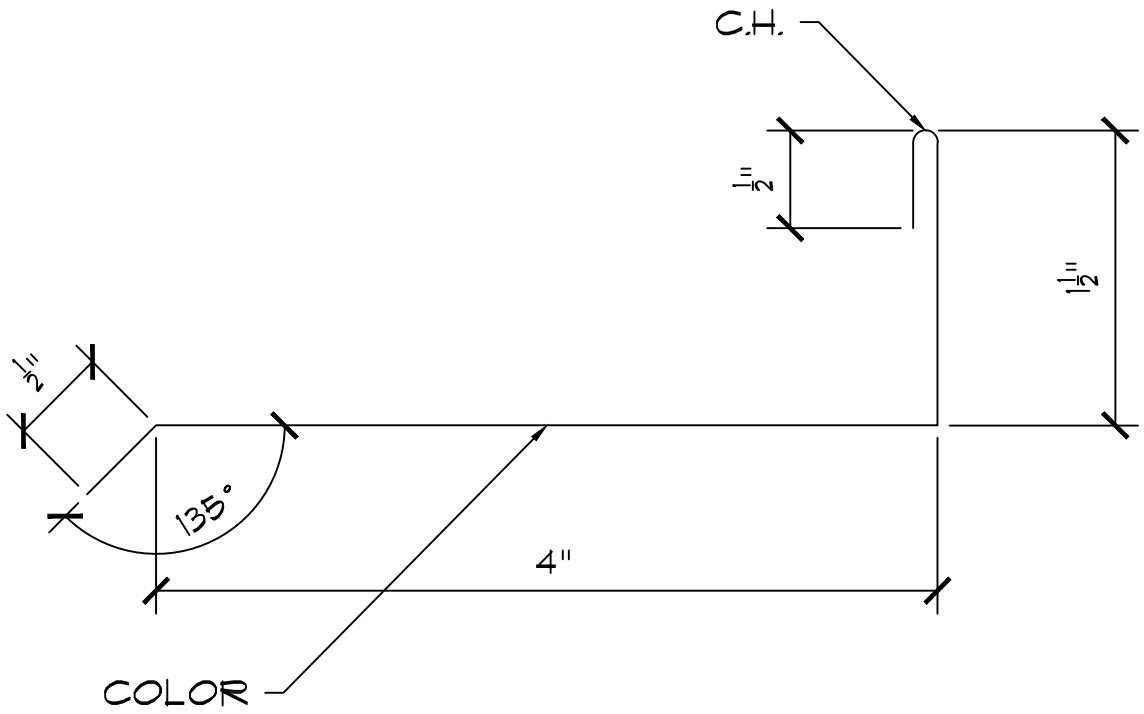

GAUGE:	STRETCH-OUT: 6 1/2"	PART #: WC217
COLOR:	# OF BREAKS: 4	PART NAME:
LENGTH: 10'-0"	QUANTITY:	WALL CLOSURE

CUSTOMER:	DRAWN BY:	AEP SPAN
JOB NAME:	DATE:	
AEPS ORDER #:	ACCEPTED BY:	
	DATE:	

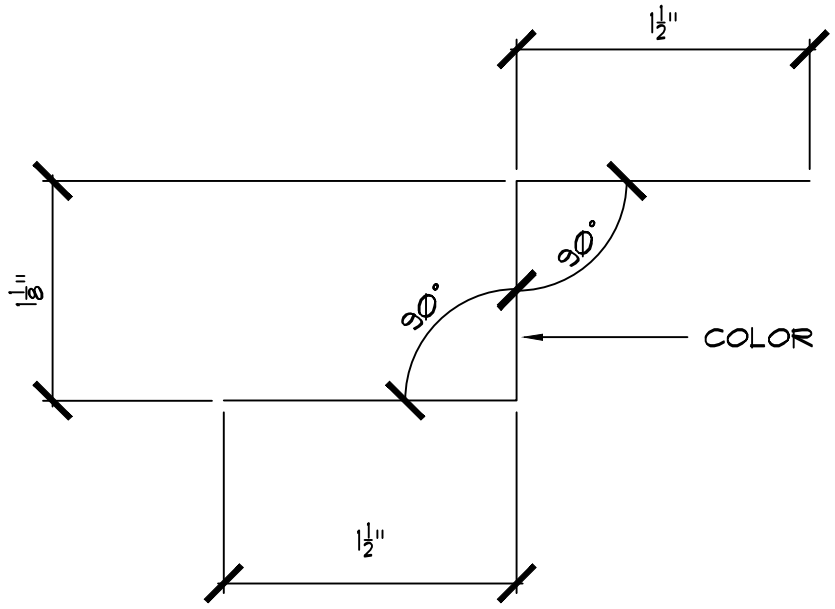

GAUGE:	STRETCH–OUT: 4 1/8"	PART #: ZC216
COLOR:	# OF BREAKS: 2	PART NAME:
LENGTH: 10'-0"	QUANTITY:	ZEE CLOSURE

CUSTOMER:	DRAWN BY:	AEP SPAN
JOB NAME:	DATE:	
AEPS ORDER #:	ACCEPTED BY:	
	DATE:	

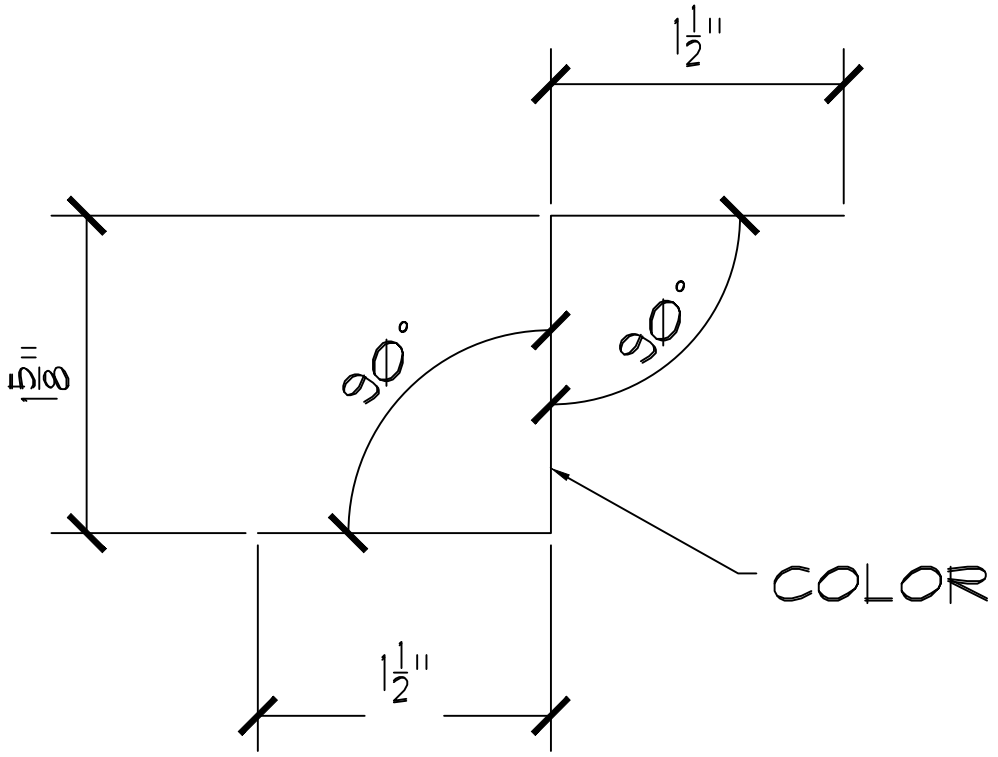

GAUGE:	STRETCH-OUT: 4 5/8"	PART #: ZC219
COLOR:	# OF BREAKS: 2	PART NAME:
LENGTH: 10'-0"	QUANTITY:	ZEE CLOSURE

CUSTOMER:	DRAWN BY:	AEP SPAN
JOB NAME:	DATE:	
AEPS ORDER #:	ACCEPTED BY:	
	DATE:	

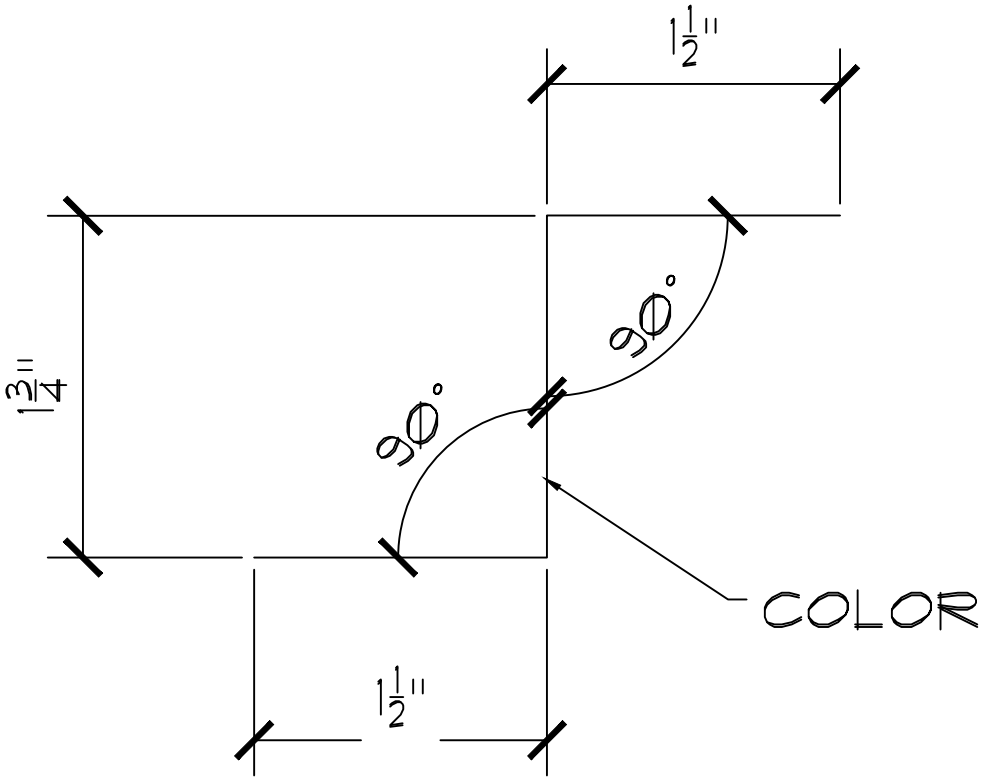

GAUGE:	STRETCH-OUT: 4 3/4"	PART #: ZC220
COLOR:	# OF BREAKS: 2	PART NAME:
LENGTH: 10'-0"	QUANTITY:	ZEE CLOSURE

CUSTOMER:	DRAWN BY:	AEP SPAN
JOB NAME:	DATE:	
AEPS ORDER #:	ACCEPTED BY:	
	DATE:	

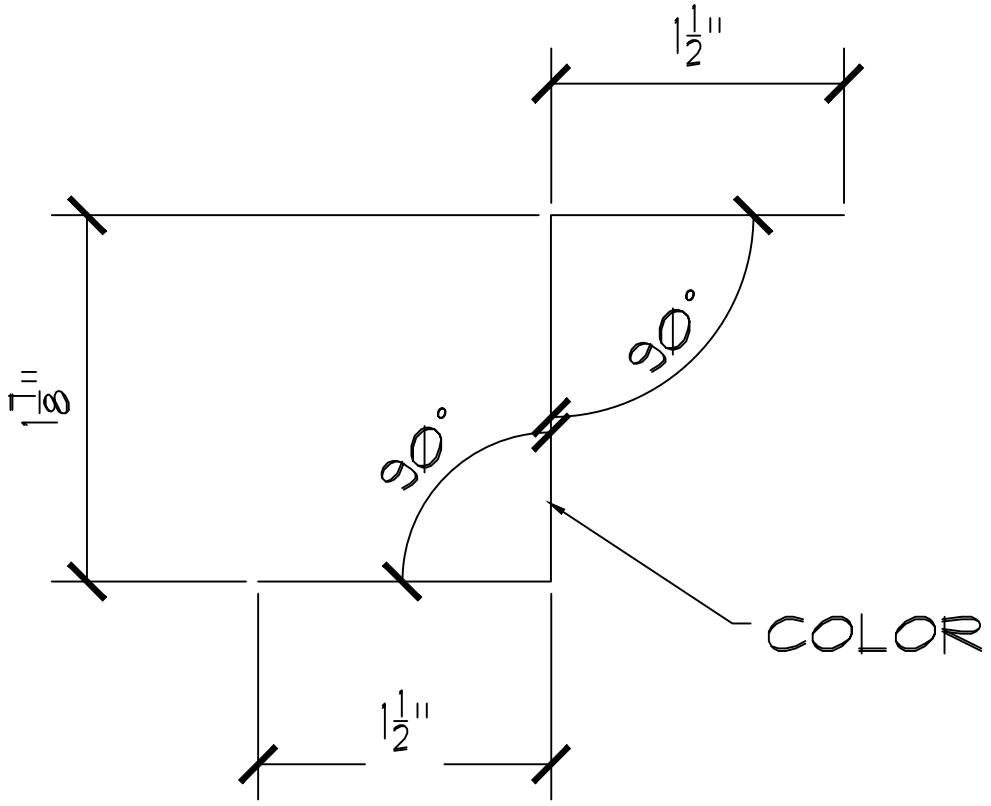

GAUGE:	STRETCH-OUT: 4 7/8"	PART #: ZC223
COLOR:	# OF BREAKS: 2	PART NAME:
LENGTH: 10'-0"	QUANTITY:	ZEE CLOSURE

CUSTOMER:	DRAWN BY:	AEP SPAN
JOB NAME:	DATE:	
AEPS ORDER #:	ACCEPTED BY:	
	DATE:	

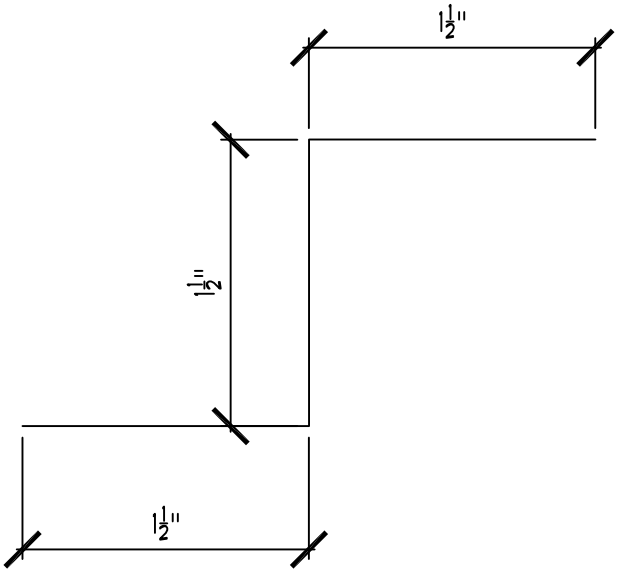

GAUGE:	STRETCH–OUT: 4 1/2"	PART #: ZC224
COLOR:	# OF BREAKS: 2	PART NAME:
LENGTH: 10'-0"	QUANTITY:	ZEE CLOSURE

CUSTOMER:	DRAWN BY:
JOB NAME:	DATE:
AEPS ORDER #:	ACCEPTED BY:
	DATE:

AEP SPAN

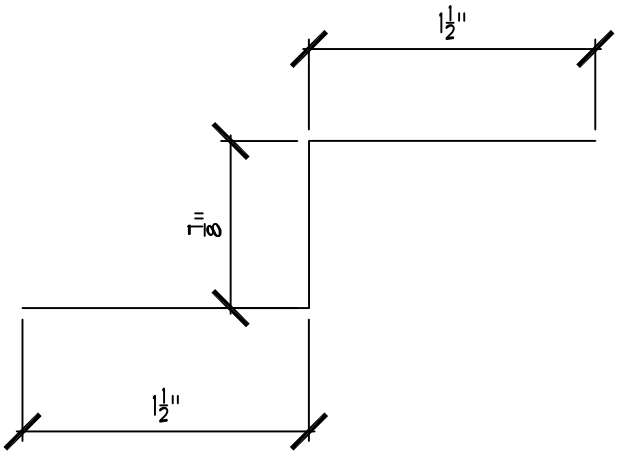

GAUGE:	STRETCH–OUT: 3 7/8"	PART #: ZC225
COLOR:	# OF BREAKS: 2	PART NAME:
LENGTH: 10'-0"	QUANTITY:	ZEE CLOSURE

CUSTOMER:	DRAWN BY:	AEP SPAN
JOB NAME:	DATE:	
AEPS ORDER #:	ACCEPTED BY:	
	DATE:	

Return to Menu

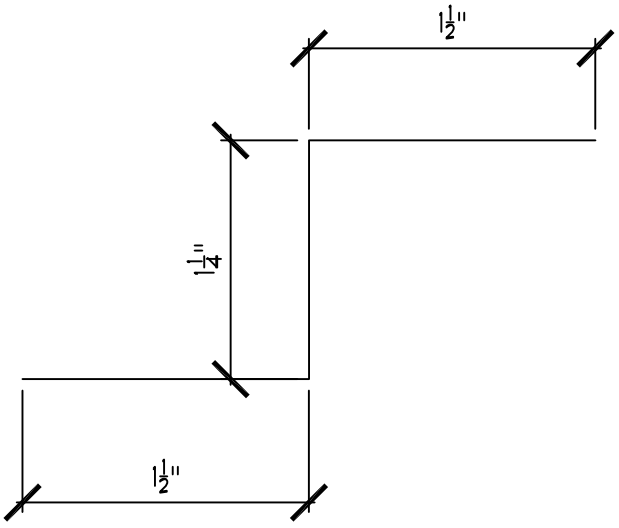

GAUGE:	STRETCH–OUT: 4 1/4"	PART #: ZC226
COLOR:	# OF BREAKS: 2	PART NAME:
LENGTH: 10'-0"	QUANTITY:	ZEE CLOSURE

CUSTOMER:	DRAWN BY:	AEP SPAN
JOB NAME:	DATE:	
AEPS ORDER #:	ACCEPTED BY:	
	DATE:	

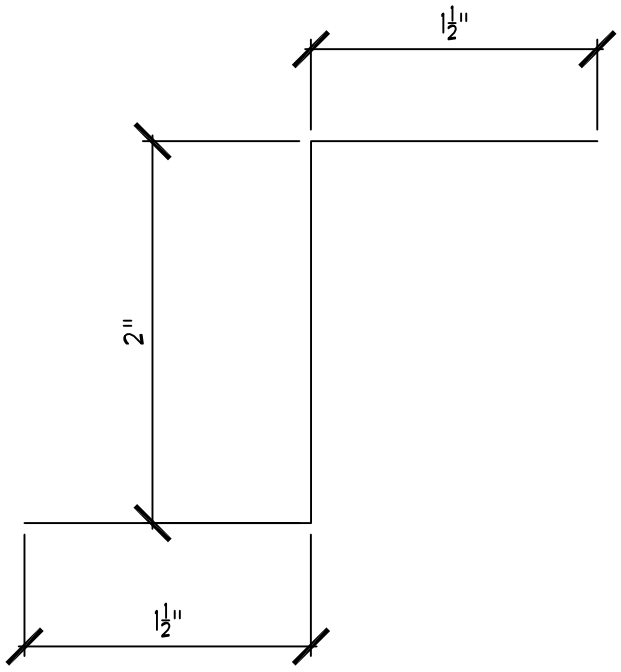

GAUGE:	STRETCH–OUT: 5"	PART #: ZC227
COLOR:	# OF BREAKS: 2	PART NAME:
LENGTH: 10'-0"	QUANTITY:	ZEE CLOSURE

CUSTOMER:	DRAWN BY:	AEP SPAN
JOB NAME:	DATE:	
AEPS ORDER #:	ACCEPTED BY:	
	DATE:	

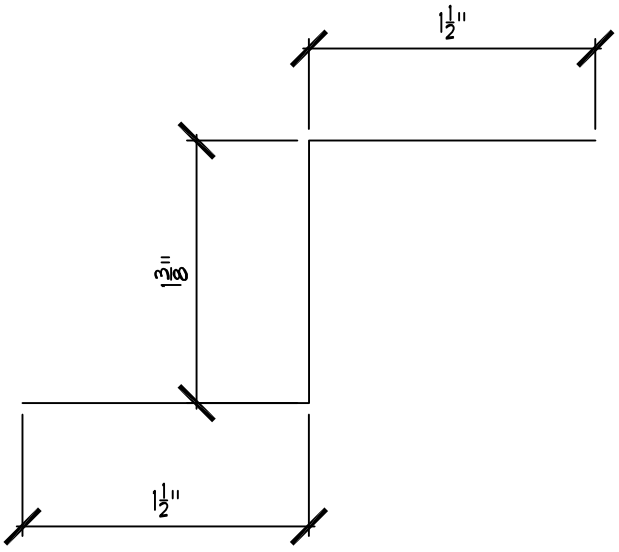

GAUGE:	STRETCH–OUT: 4 3/8"	PART #: ZC228
COLOR:	# OF BREAKS: 2	PART NAME:
LENGTH: 10'-0"	QUANTITY:	ZEE CLOSURE

CUSTOMER:	DRAWN BY:	AEP SPAN
JOB NAME:	DATE:	
AEPS ORDER #:	ACCEPTED BY:	
	DATE:	