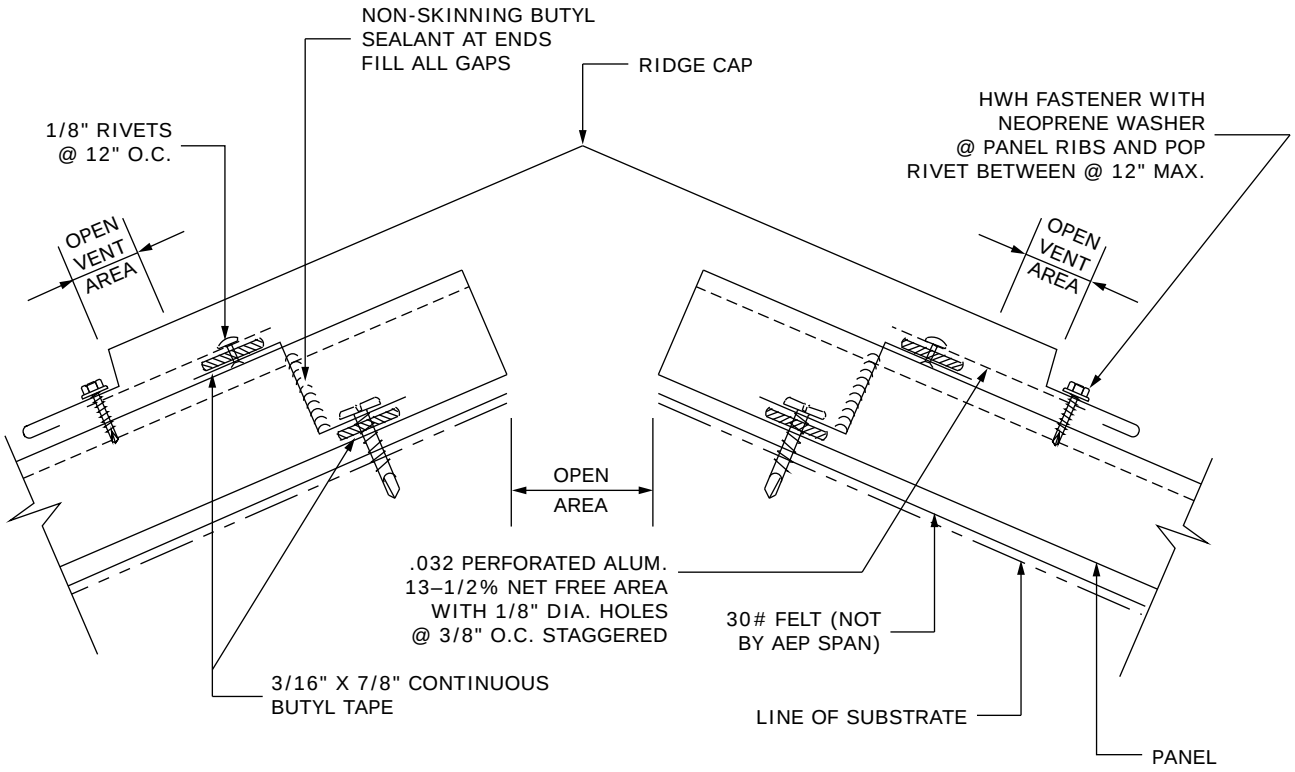

NOTE:
CUSTOMER MUST PROVIDE
VENT AREA REQUIREMENTS

AEP SPAN
Engineered Solutions in Metal

ACCESSORIES

VENTED RIDGE

AC-6

REV. 05/01/02