Metal Roof Systems:
Design & Installation Considerations

www.aepspan.com

Metal Roof Systems: Design & Installation Considerations

AEP Span
2110 Enterprise Blvd
West Sacramento, CA 95691

Course Number: AEP471F2F

Learning Units: 1.0 HSW/LU

AEP Span is a Registered Provider with The American Institute of Architects Continuing Education Systems (AIA/CES). Credit(s) earned on completion of this program will be reported to AIA/CES for AIA members. Certificates of Completion for both AIA members and non-AIA members are available upon request.

This program is registered with AIA/CES for continuing professional education. As such, it does not include content that may be deemed or construed to be an approval or endorsement by the AIA of any material of construction or any method or manner of handling, using, distributing, or dealing in any material or product.

Questions related to specific materials, methods, and services will be addressed at the conclusion of this presentation.

Learning Objectives

At the end of this program, participants will be able to:

- list the advantages and disadvantages of Architectural Roofing vs. Industrial Roofing
- state the specification considerations related to a metal roof installation
- discuss the environmental impact of metal roofs versus alternative roofing materials
- list the design and installation issues that help facilitate a successful metal roof solution.

Introduction

This section reviews:

- the pros and cons of Architectural Roofing vs. Industrial Roofing
- exposed fastener roof systems and standing seam roof assemblies
- specification considerations that are critical to a successful installation.

Architectural Roofing & Industrial Roofing

Architectural Roof System

- specified for performance, life cycle costs, as well as aesthetics reasons
- non-structural metal roofing usually requires a solid substrate beneath it

Low Slope Industrial Roof System

- selected more for its function, performance, and when cost is the major factor of a project feasibility
- structural metal roofing attaches directly to secondary structural members

Architectural Roofing & Industrial Roofing

ARCHITECTURAL ROOFING	
Advantages	**Disadvantages**
Aesthetically pleasing with clean architectural lines	May require solid supportive substrate
Concealed attachments, fasteners and sealants	Requires a more skilled installer
Design flexibility - variety of rib profiles, styles and colors	Does not stabilize purlins or other steel framing
Adaptable to varying roof slopes and conditions	
Positive interlocking panel ribs and thermally responsive clips	

INDUSTRIAL ROOFING	
Advantages	**Disadvantages**
Lower cost than architectural types	Designed for function rather than appearance
Lower than normal slopes (1/4 : 12) applications	Limited color selection
Structurally responsive over open framing	Detail limitations for hip and valley conditions
Taller than normal rib provides water tightness assurance at low slopes	May have some exposed fasteners and closures
Positive interlocking panel ribs for long length capabilities	

Exposed Fastener Roof Systems

- Economical performance value option
- Durable and lightweight
- Attractive finishes and textures
- Can be installed on a roof or vertically/horizontally in a wall application
- Can be fabricated in varying gauges

Exposed Fastener Roof Systems

- An exposed fastener panel relies on a visible fastening device and requires field applied sealant to improve the weather tightness of the assembly.

- Panels are “pinned” at every attachment point, thus not allowing for thermal movement.

Corrugated: Roof Application (32” Coverage)

Roof or Wall Application (36” Coverage)

Exposed Fastener Roof Systems

- Over time, the expansion and contraction of the panels can create an elongated hole at the screw location and jeopardize the weather tightness and attachment of the panel.
- Typically, exposed fastener panels should only be used on shorter panel runs and are not recommended for slopes less than 1:12.
- In these cases, a standing seam metal roof is preferred.

Standing Seam Features

Standing Seam
- tall seam resists leaks

Factory Applied Sealant
- ease of installation
- assures weather tightness

Floating Clip/Concealed Fastener
- allows thermal movement

Bearing Plate with Rigid Insulation
- increases clip footprint
- spreads the load of the clip

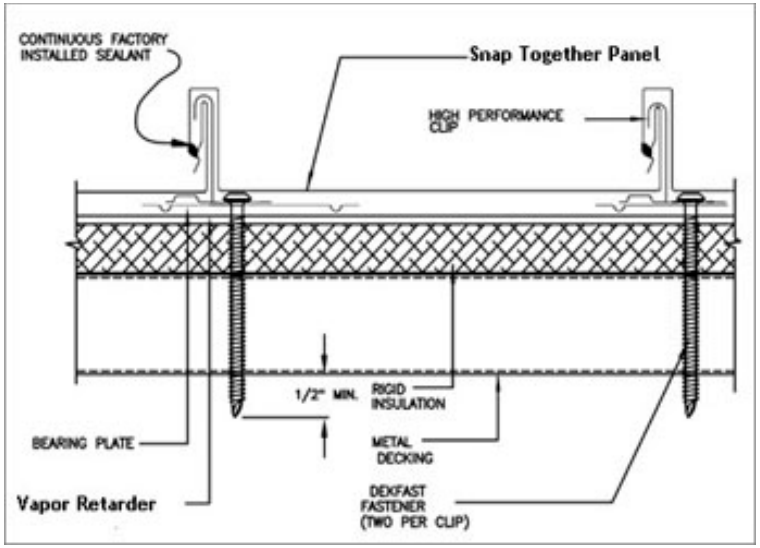

Standing Seam Configurations

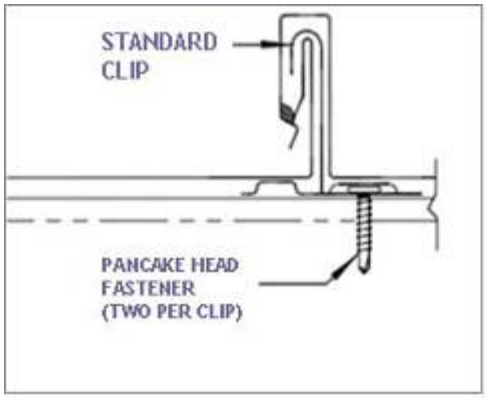

Snap Style

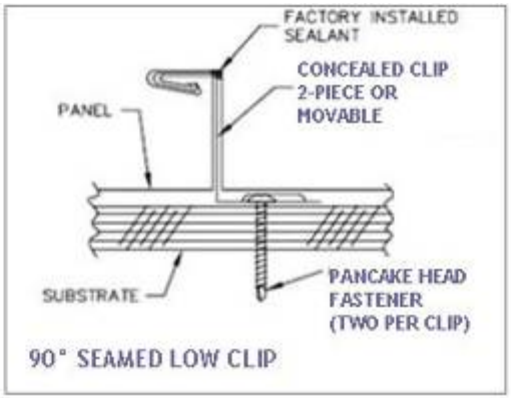

90 Degree Mechanically Seamed

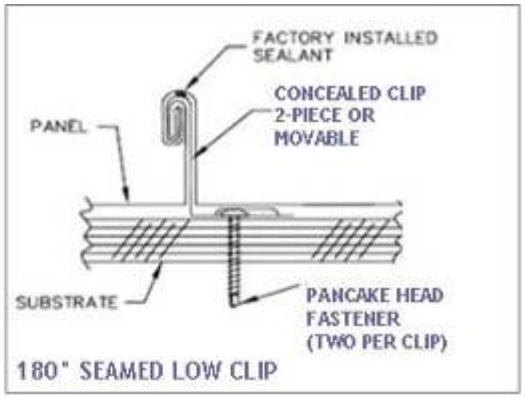

180 Degree Mechanically Seamed

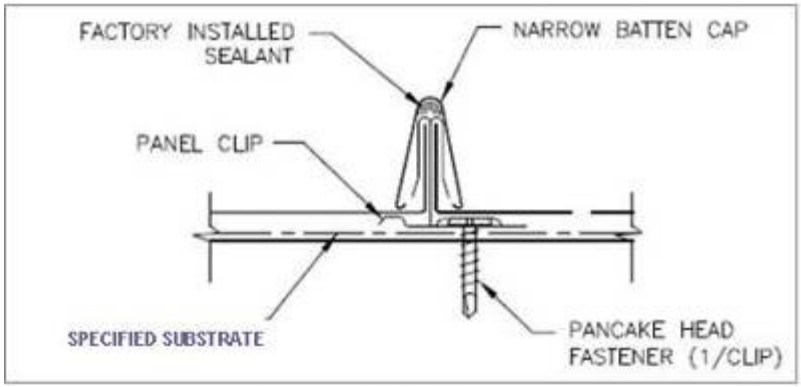

Narrow Batten Seam

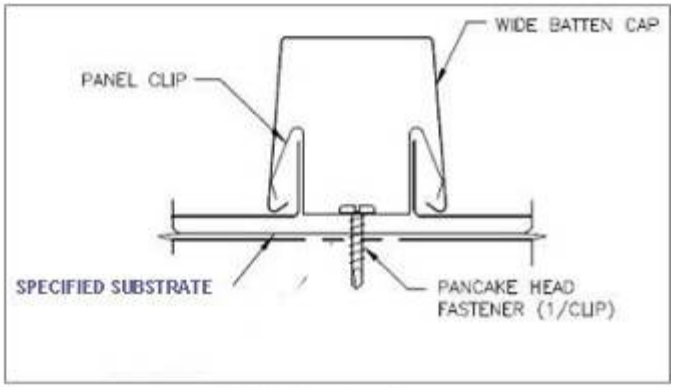

Wide Batten Seam

Standing Seam Systems

- Standing seam systems offer performance coupled with aesthetics.
- A standing seam panel is one with no visible or exposed fastening device and can provide for sufficient attachment and thermal movement through the use of a thermally-responsive clip and fastener.
- Clips are attached to the substrate and entrap the vertical panel legs.

Thermally Responsive Clips

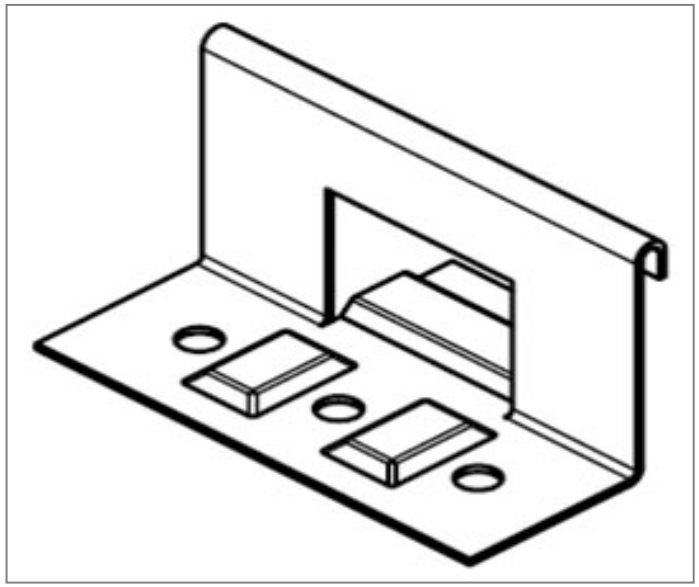

One-piece clips allow snap-together metal roof panels to thermally move over the top of the clip.

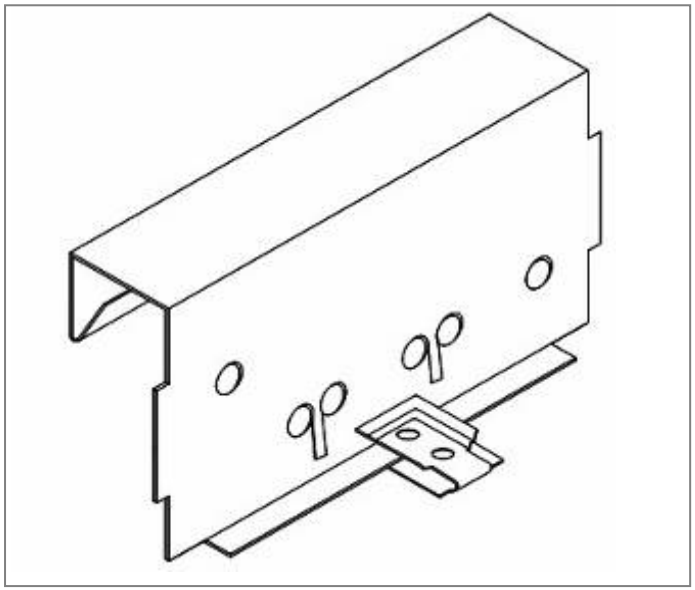

Two-piece clips allow for mechanically seamed panels to float back and forth under thermal load along the base of the clip. Floating clips allow for +/- 1 inch of thermal movement.

Bearing Plates

Bearing plates are used when installing panels over rigid insulation to disperse the load of the clip and prevent the clip from overly compressing the insulation.

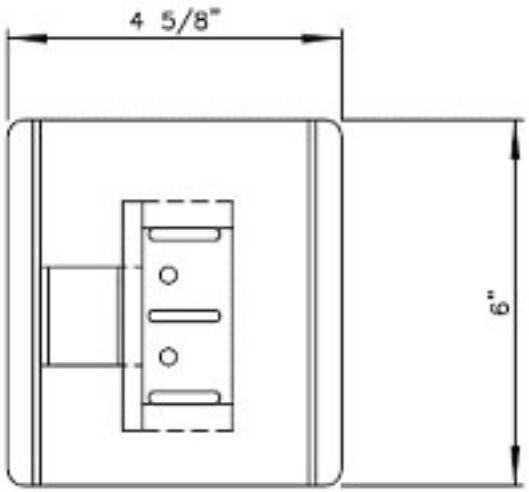

Snap-Together High Performance Clip with Bearing Plate

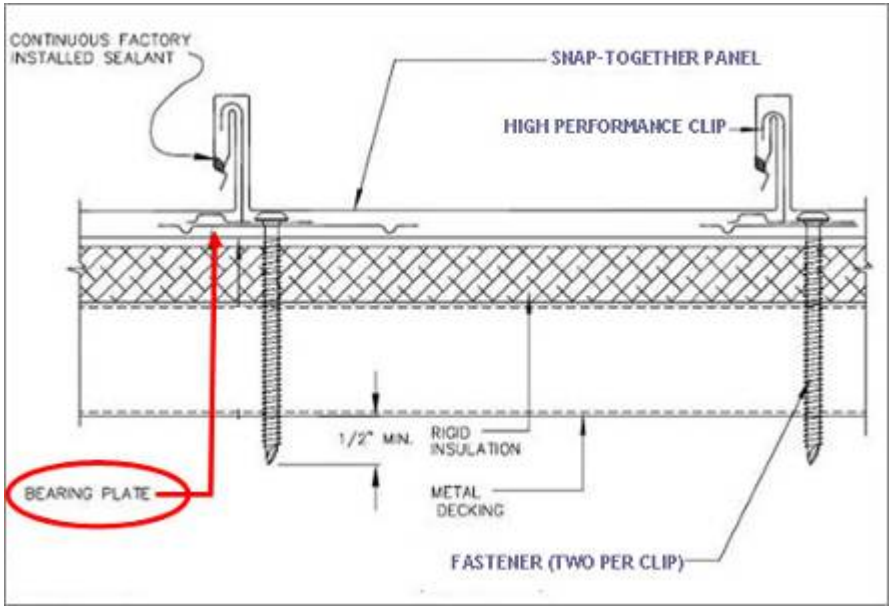

Continuous Standing Seam Panels

Continuous standing seam panels can be used for long run, low slope installations, but it is important to be aware of the limitations.

Continuous Standing Seam Panels

Continuous standing seam panels at extra long lengths are prone to installation damage and present greater installation challenges.

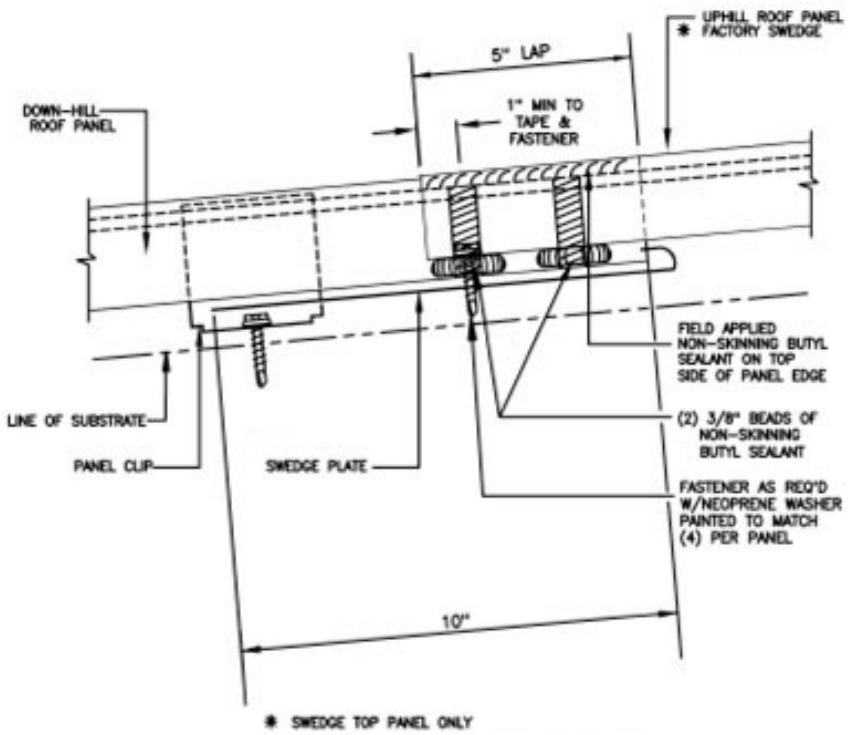

Brigham Young Sports Complex was built with continuous panels.

Continuous Standing Seam Panels

- If continuous panels are required, ensure you deal with a quality supplier.
- Some manufacturers offer mobile factory-quality roll formers.
- Asking for mobile roll former UL certification is recommended.

Substrates & Assemblies

- Available in the market are non-structural metal roofing panels, designed to shed water in sloped applications over solid substrates, as well as structural metal roofing panels designed to resist standing water over both solid substrates and open framing conditions.

- With limitations based on wind uplift and condensation control, metal roofing can be installed over wood substrates.

- Metal roofing can also be installed over steel substrates.

Substrates & Assemblies

- Selecting the proper substrate is critical to the success of the roofing installation.
- A poor substrate can result in severe oil canning, potentially leading to premature failure.

Oil Canning

Underlayment Materials

Choice of the underlayment will depend on several factors, including condensation control, snow density, rainfall density and heat developed.

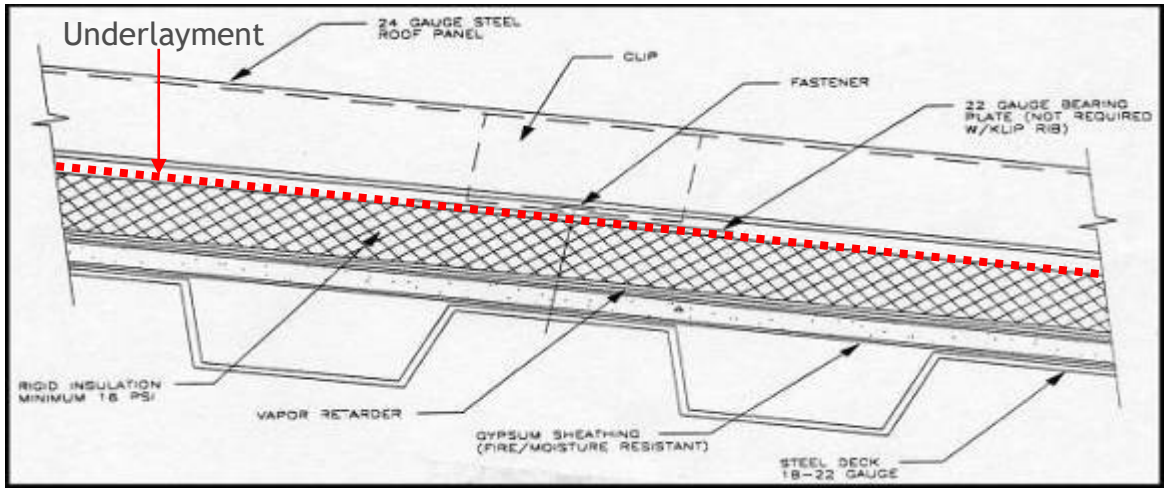

Underlayment Materials

Vapor Retarders and Underlayments

- vary with building conditions and roof assembly
- generally designed to be installed on the warm side of the insulation, or directly underneath the metal panel

30-40 Mil Peel-and-Stick Membranes

- act as waterproof underlayments in critical roof areas
- can also be used as vapor barriers to provide early construction dry-in capabilities and a secondary roof membrane between the metal roof and the substrate

Gauge

- **Exposed Fastened Roof Panels**
  - heavier gauge material is generally used to accommodate requirements for positive loading only
  - 26-, 24-, and 22-gauge are industry standard
  - 20- and 18-gauge are available non-standard for select profiles when required for added durability

- **Standing Seam Roof Panels**
  - generally offered in 24-gauge or 22-gauge steel

- Exposed fastened panels and standing seam panels can be provided in aluminum, copper or stainless steel.

Metallic Coatings

- Al-Zn is the most widely used metallic coating for the corrosion protection of steel.

- Galvalume® and Zincalume® are two common trade names of Al-Zn.

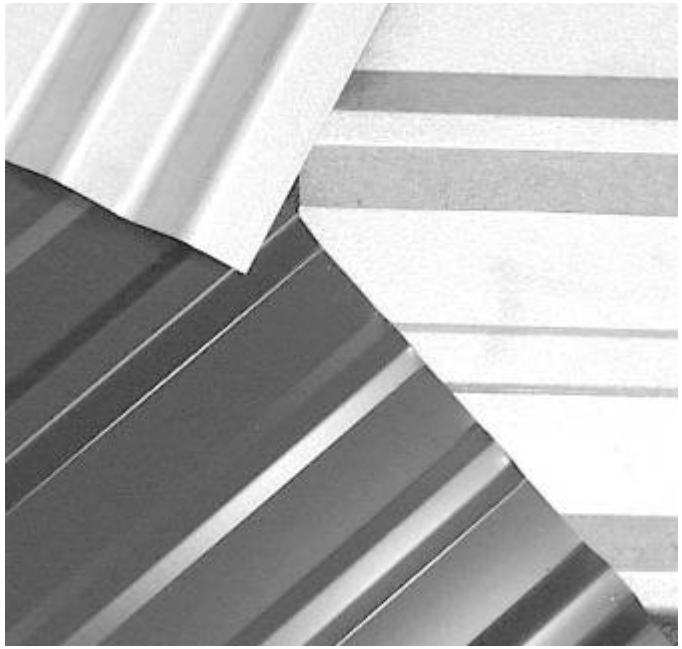

- The aluminum component (55%) of Al-Zn provides corrosion protection and corrosion warranty, while the zinc component (45%) provides the sacrificial characteristic that protects material edges and cuts.

Metallic Coatings

- When used for low slope roofing, Al-Zn coated sheet generally lasts for over 30 years without corrosion failure.
- Hot-dipped steel sheets are available bare (unpainted) with up to a 25-year warranty (against rust and perforation).
- Zinc coated steel (often seen as G-60 or G-90 galvanized) is not warrantable, therefore, it is recommended to specify Al-Zn coated products.

Paint

Paint options for metal roofs include:

- Siliconized Modified Polyester (SMP)
- Polyester
- Kynar 500 (also known as PVF-Polyvinyledine fluoride)

- SMP coatings are generally used on 26-gauge industrial products and pre-engineered building systems and have a 20-year comprehensive warranty.

- Both SMP and polyester paint coatings complement the industry with economical paint systems that have decreased chalk and fade values, compared to Kynar.

Paint

- The chalk and fade qualities of Kynar 500 outperform polyester powder, urethane, silicone polyester and acrylic coatings and may be warranted for up to 30 years (comprehensive and limited to normal atmospheric conditions).
- When Kynar 500 is coupled with a Zincalume/Galvalume substrate, the product exhibits exceptional properties.
- For severe corrosive or salt water environments, paint manufacturers have developed alternatives to the industry standard 1.0 mil Kynar based coatings.

Paint

- Coatings have been developed that meet the standards for "Cool Roofing" for both solar reflectance and thermal emittance.

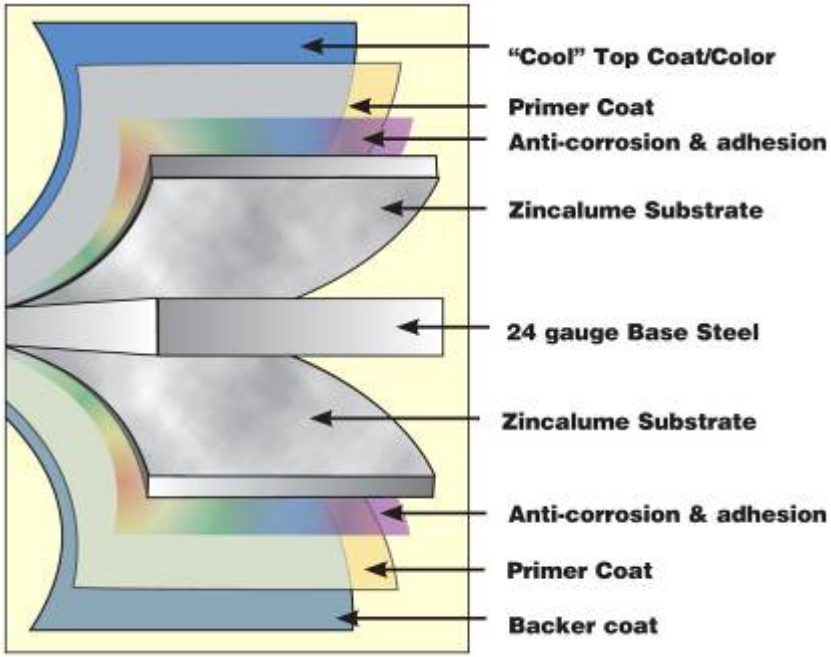

- Many premier roofing systems are being utilized that not only provide a high degree of weather tightness and longevity, but are also helping to keep the building energy efficient.

Paint Warranty

- When specifying paint, check the warranty carefully and verify the warranty coverage.
- It is also important to review the warranty "remedy" the manufacturer is willing to provide.

Sheet Metal Roofing

Section 07600

1.06 GUARANTEE

Provide Manufacturer's standard 25-year paint warranty including coverage against cracking, flaking, or peeling (loss of adhesion), change color (fade) more than 5 Hunter delta-E units or chalk in excess of number 8

Example of how warranties could be called out in specifications to ensure the warranty coverage is comprehensive

Sealants

Sealants protect against moisture intrusion into the roof at exposed panel and flashing edges or laps conditions.

Non-Curing Butyl (tube applied):

- should be used in any areas on a metal roof that are subject to dynamic movement of the panel
- protects against capillary action
- allows the panels and flashing to react thermally without compromising the integrity of the sealant
- will never dry out or break down, provided it is not exposed to sunlight

Sealants

Extruded Butyl Tape

- available in rolls up to 50 feet long
- used where long continuous beads of sealants are required in highly sensitive areas
- should be used in all non-exposed applications, as it will break down when exposed to sunlight
- the same as non-curing butyl sealants except it is available in a variety of thicknesses, widths and lengths based on specific applications
- most metal roofing details will call for the type and application of butyl tape

Sealants

Single Component Urethane (tube applied)

- This type of sealant is used for any area of the roof that requires sealant to be exposed to sunlight.

- Often these sealants are used for application of the metal roofing flashing when they are integrating with another non-metal surface, such as masonry block, stucco walls, etc.

Specifying a Metal Roof Solution

- Material quality and source
- Testing (manufacturer can provide actual test data)
  - wind uplift ASTM E1592 test to ultimate failure
  - air and water infiltration ASTM E1680 and E1646
- Testing is best run, or at least witnessed by an ANSI accredited third party. ASTM is a standard that explains how to run a test, it doesn't define competency needed to perform the test.
- Manufacturer qualification
  - how metal panel is manufactured
  - level of manufacturer experience

Specifying a Metal Roof Solution

- Attachment of the roof to the substrate
- Installer qualification (level of experience, manufacturer-approved)
- Finish warranty and weather tight warranty
- Verify submittals
  - material gauge
  - testing: check for UL certification
  - require stamped attachment calculation and check manufacturer's references

Introduction

Metal Roofing:

- contains recycled content
- is sustainable
- lasts much longer than most roofing materials
- is 100% recyclable at the end of its useful life

Various software programs that calculate a product's environmental and social impact are available for Designer/Architect use.

Environmental Impact of Roofing Materials

Steep Slope Metal Against Other Roof Materials

	Black asphalt	30 yr asphalt shingle	Painted metal	Cool painted metal	Clay tile	Concrete
Energy usage	6	5	2	1	3	4
Material use	6	5	2	1	3	4
Global warming	6	3	2	1	4	5
Ozone Depletion	1	1	2	2	1	1
Acidification	6	3	2	1	4	5
Waste	4	3	2	1	5	6
Area Use	6	3	2	1	4	5
Water Emission	3	1	4	2	5	6
Photo chem. Ozone depletion	6	5	2	1	4	3
Toxicity	3	2	1	1	4	5
Risk	4	3	1	1	2	2

Relative Comparison 1 = Best Performer
Source: BASF

Cool Metal Roofing

- Some coatings/finishes qualify metal as a recognized cool roof product.
- A cool metal roof has infra red reflective pigments in the paint for higher reflectivity values, even in darker colors.

Dark Color - Cool Roof
Heat is reflected into the atmosphere rather than into the building

Cool Metal Roofing

- Cool metal roofing has high solar reflectance values and high emissivity values exceeding 80%.
- A cool metal roof will reflect the solar heat back into the atmosphere, lowering both the inside temperature of the building and the surrounding environment, thereby reducing the heat island effect.
- Additionally, the life expectancy of the roof is increased due to less expansion and contraction.

Cool Metal Roofing

When specifying a cool metal roof solution, look for paints with a high Solar Reflectance Value that qualify for LEED® and ENERGY STAR® programs.

PRODUCT DESCRIPTION	CA TITLE 24 & ENERGY STAR: via CRRC listings (data based on color families)				Energy Star		CA Title 24	LEED: via Accredited Independent Testing Laboratory (using ASTM C1549, C1371, & E1980)				
	CRRC Reference Number	Solar Reflectance (Init.)	Thermal Emittance (Init.)	SRI Init.	Low Slope	Steep Slope		Solar Reflectance (Init.)	Thermal Emittance (Init.)	SRI Init.	Low Slope	Steep Slope (Leed V3)
BARE ZINCALUME®												
ZINCALUME® Plus	1014-0002	0.68	0.30	65	✓	✓		0.68	0.30	65		✓
DURATECH® NT COLORS												
COOL TAHOE BLUE	0818-0027	0.25	0.83	22		✓	REFER TO CALIFORNIA ENERGY COMMISSION (CEC) REQUIREMENTS	0.33	0.84	33		✓
COOL OLD TOWN GRAY	0818-0039	0.35	0.83	35		✓		0.40	0.84	43		✓
COOL DENALI GREEN	0818-0028	0.25	0.83	22		✓		0.30	0.83	29		✓
COOL RUSTIC RED	0818-0031	0.35	0.83	35		✓		0.40	0.84	43		✓
COOL LIGHT STONE	0818-0033	0.55	0.83	63		✓		0.60	0.84	70		✓
COOL DESERT BEIGE	0818-0042	0.45	0.83	49		✓		0.51	0.84	58		✓
COOL CHESTNUT BROWN	0818-0034	0.32	0.83	31		✓		0.35	0.83	36		✓
COOL WEATHERED COPPER	0818-0035	0.32	0.83	31		✓		0.32	0.83	32		✓
COOL WINTER WHITE	0818-0044	0.70	0.83	84	✓	✓		0.73	0.83	88	✓	✓
COOL SURF WHITE	0818-0036	0.55	0.83	63		✓		0.63	0.84	74		✓
DURATECH® 5000 & DURATECH® MX COLORS												
COOL METALLIC SILVER	0818-0003	0.35	0.75	32		✓		0.57	0.82	65		✓
COOL ZACTIQUE® II	0818-0004	0.35	0.75	32		✓		0.37	0.84	39		✓
COOL METALLIC COPPER	0818-0006	0.35	0.75	32		✓		0.48	0.83	53		✓
COOL METALLIC CHAMPAGNE	0818-0038	0.35	0.75	32		✓		0.48	0.84	54		✓
COOL TAHOE BLUE	0818-0007	0.25	0.83	22		✓		0.33	0.84	33		✓
COOL REGAL BLUE	0818-0008	0.25	0.83	22		✓		0.30	0.84	29		✓
COOL OLD TOWN GRAY	0818-0009	0.35	0.83	35		✓		0.40	0.85	43		✓
COOL ZINC GRAY	0818-0010	0.35	0.83	35		✓		0.37	0.85	39		✓
COOL MARINE GREEN	0818-0011	0.32	0.83	31		✓		0.43	0.85	47		✓
COOL FOREST GREEN	0818-0012	0.25	0.83	22		✓		0.30	0.84	29		✓
COOL HEMLOCK GREEN	0818-0048	0.32	0.83	31		✓		0.34	0.85	35		✓
COOL JADE GREEN	0818-0014	0.25	0.83	22		✓		0.29	0.86	29		✓
COOL LEAF GREEN	0818-0015	0.25	0.83	22		✓		0.30	0.85	30		✓
COOL MATTE BLACK	0818-0046	0.25	0.83	22		✓		0.30	0.84	29		✓
COOL COLONIAL RED	0818-0016	0.25	0.83	22		✓		0.34	0.85	35		✓
COOL TERRA COTTA	0818-0037	0.35	0.83	35		✓		0.39	0.84	41		✓
COOL RED	0818-0017	0.25	0.83	22		✓		0.42	0.85	46		✓
COOL DARK BRONZE	0818-0018	0.25	0.83	22		✓		0.32	0.84	32		✓
COOL PARCHMENT	0818-0047	0.45	0.83	49		✓		0.51	0.84	58		✓
COOL WEATHERED COPPER	0818-0019	0.32	0.83	31		✓		0.34	0.83	34		✓
COOL SIERRA TAN	0818-0020	0.45	0.83	49		✓		0.49	0.84	55		✓
COOL REGAL WHITE	0818-0049	0.70	0.83	84	✓	✓		0.73	0.84	88	✓	✓
VINTAGE	1014-0003	0.30	0.70	22				0.30	0.70	22		

All ratings listed are initial readings. Three-year Reflectivity is expected to be +/- 1% of Initial based upon Oak Ridge National Labs and Lawrence Berkley National Labs testing and studies.

A - Reflectivity data for Bare Galvalume and Zincalume is actual 3-year weathered solar reflective data

B - Bare Zincalume is listed on the ENERGY STAR site as an approved product, but does not qualify for the homeowner tax credit.

Zincalume® is a registered trademark of BlueScope LTD. Vintage® is a registered trademark of Steelscape Inc.

Modular Solar Panels

- A metal roof solution can incorporate photo voltaic panels to improve the energy efficiency of a building.

- It is recommended to use a system that clamps to the panel, usually with a set screw.
- Clamp attachment is the ideal choice as it eliminates the need for multiple penetrations

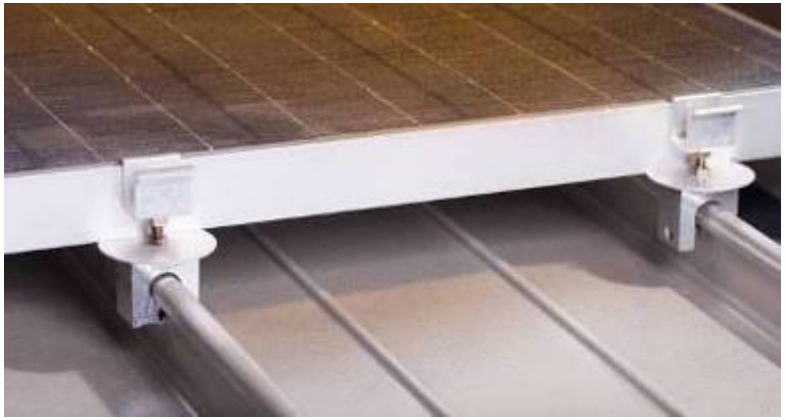

Modular Solar Panels

- There are multiple manufacturers of roof clamps that are suitable for PV applications. Some utilized an integral clamp, as shown on the previous slide. Other options include framing grids attached directly to the clamps.

Modular Solar Panels

- Exposed copper should be minimized or eliminated due to concerns with dissimilar metals and electrolysis. This can impact any material warranties on the panel.

- Warranty: Clamp on systems will not void a warranty, but should be noted that seam damage from a clamp on system is not covered by most manufacturers. Specific torque setting from the clamp manufacturer should be followed.

Modular Solar Panels

Introduction

The design and installation considerations related to metal roof assemblies include:

- wind uplift
- air & water infiltration rates
- expansion & contraction
- drag load, and
- installation details.

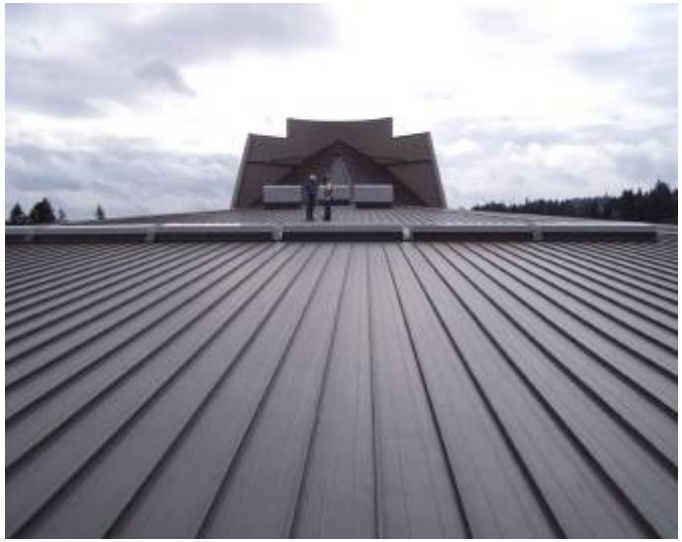

Wind Uplift

- Wind is one of the essential factors in roof design.
- The non-continuous attachment of metal roofs makes them particularly susceptible to wind uplift.
- Poor design, faulty construction, or the selection of non-compatible materials, can result in severe wind damage to the roof.

Wind Uplift: Key Factors

- Exposure: ASCE 7 defines three exposure categories: Exposure B (roughest), C, and D (smoothest)
- Basic wind speed: greater speed = greater wind uplift
- Building height: the taller the building, the greater the wind speed and wind loads
- Roof slope: the lower the slope, the greater the uplift
- Internal pressure: ASCE 7 supplies positive and negative internal pressure coefficients for use in load calculations

(Source: www.wbdg.org/resources/env_wind.php)

Wind Uplift

- Structural standing seam panels are tested under ASTM E1595 Standard Test Method for Structural Performance of Sheet Metal Roof and Siding Systems by Uniform Static Air Pressure Difference.

- All standing seam metal roof panels should be tested under the UL 580 uplift test, as well, many manufacturers test under ASTM and Factory Mutual.

- Metal roofing systems can be designed by a professional engineer to meet local code-specific wind uplift requirements.

Air & Water Infiltration Rates

- Standing seam panels can provide adequate air and water infiltration control and are often tested through ASTM E1680 (air) and E1646 (water).
- With proper sealant placement, exposed fastener panels can also provide adequate air and water infiltration control.
- Structural standing seam roof panels that require mechanical seaming in the field and also require panel-to-panel end laps due to long lengths will often be tested under ASTM E2140.

Expansion & Contraction

- Most metal roof forms owe their design, in large part, to the necessity of providing for expansion and contraction.
- The rate of expansion and contraction differs with each metal.

Table 2. Expansion and contraction

Metal	Coefficient of thermal expansion (inches per) inch per degree F°	Linear movement per 150° F, change per 8 feet	
		Decimal (in.)	Fraction (in— approx)
Steel Med	0.0000067	0.0965	6/64
Iron-wrt	0.0000067	0.0965	6/64
Nickel Copper Alloy (Monel)	0.0000077	0.1109	7/64
Stainless Steel (300-series)	0.0000098	0.1411	9/64
Copper	0.0000098	0.1411	9/64
Aluminum	0.0000128	0.1843	12/64
Lead	0.0000162	0.2338	15/64
Zinc	0.0000173	0.2491	16/64

The movement of metal can be calculated using this table. Note the distance that an 8-foot sheet will expand or contract with a 150-degree variation in temperature.

Designing to Accommodate Movement

There are three ways to accommodate thermal movement: at the low end of the panel, at the high end, or both. Typically, panels are pinned at the high end or up slope of the panel.

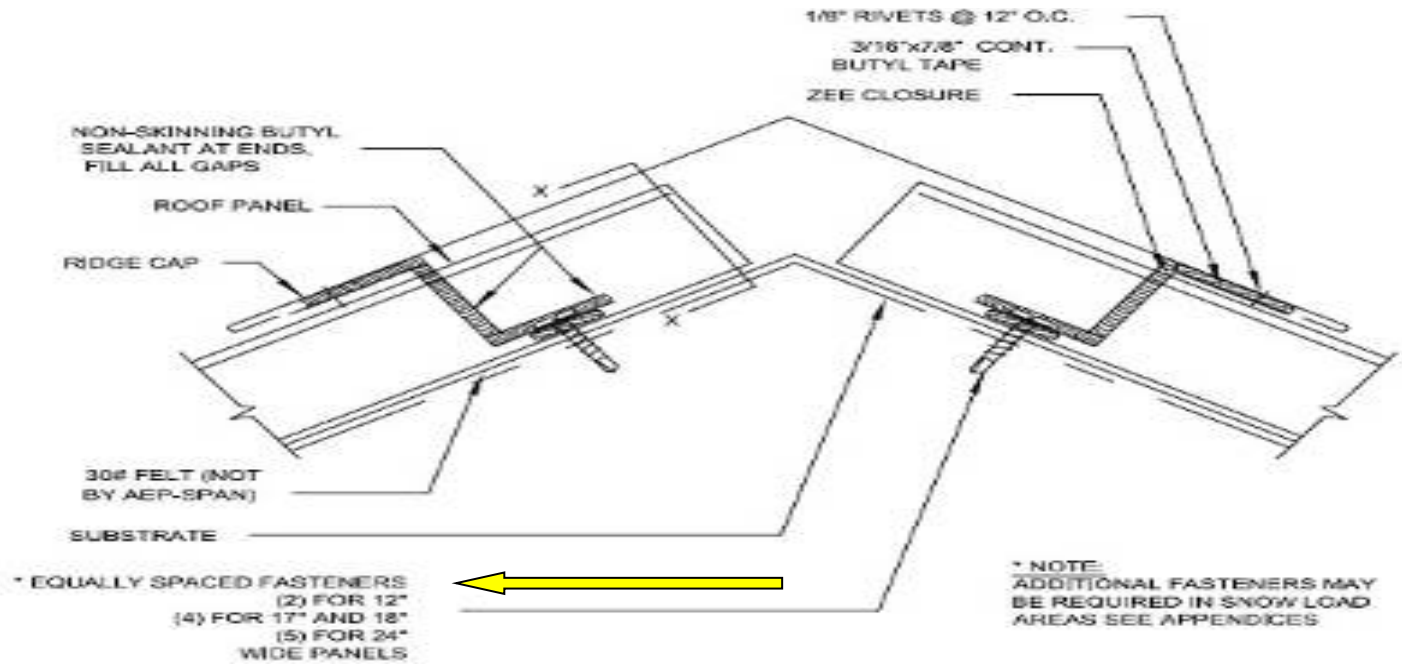

Designing to Accommodate Movement

- To accommodate movement at the high end of the panel, the low end is pinned to the structure, and the high end “floats” to accommodate the thermal movement.

- To allow expansion and contraction at both the high and low ends of the panels, pinning is required somewhere in the middle of the panel, usually at a lap.

- It is important that the panels are not pinned in more than one location as this would not allow the panel to expand and contract in a controlled manner.

Designing to Accommodate Movement

Typical installation, panel pinned at ridge (using fasteners under ridge cap)

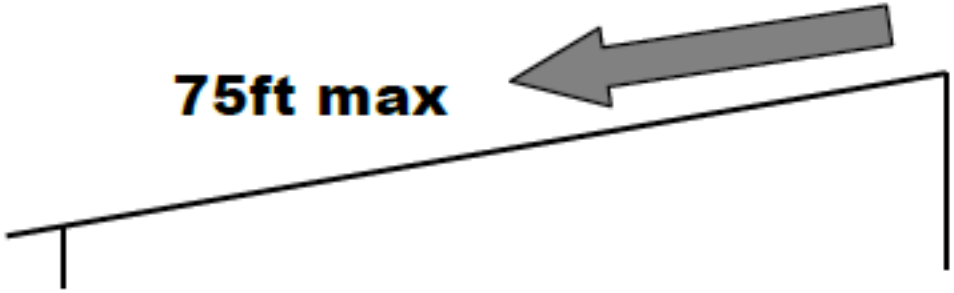

Long length installions with fixed clip at panel's midpoint:

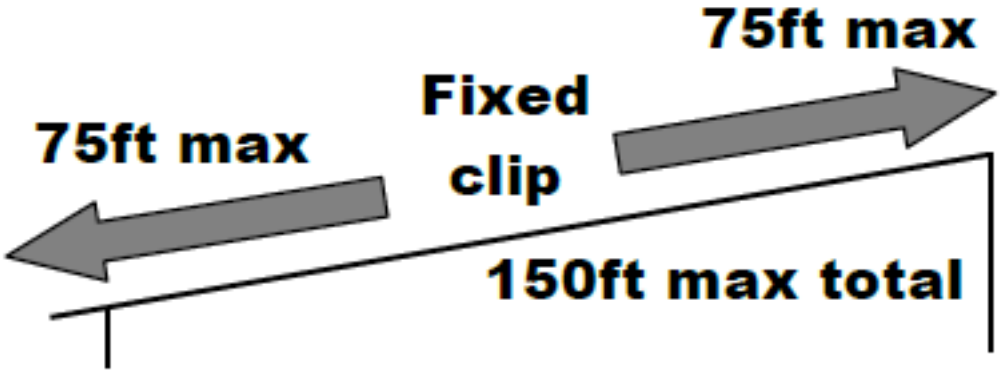

Designing to Accommodate Movement

If panels are fixed at the high end or ridge condition, free movement is required at the panels low end or eave line.

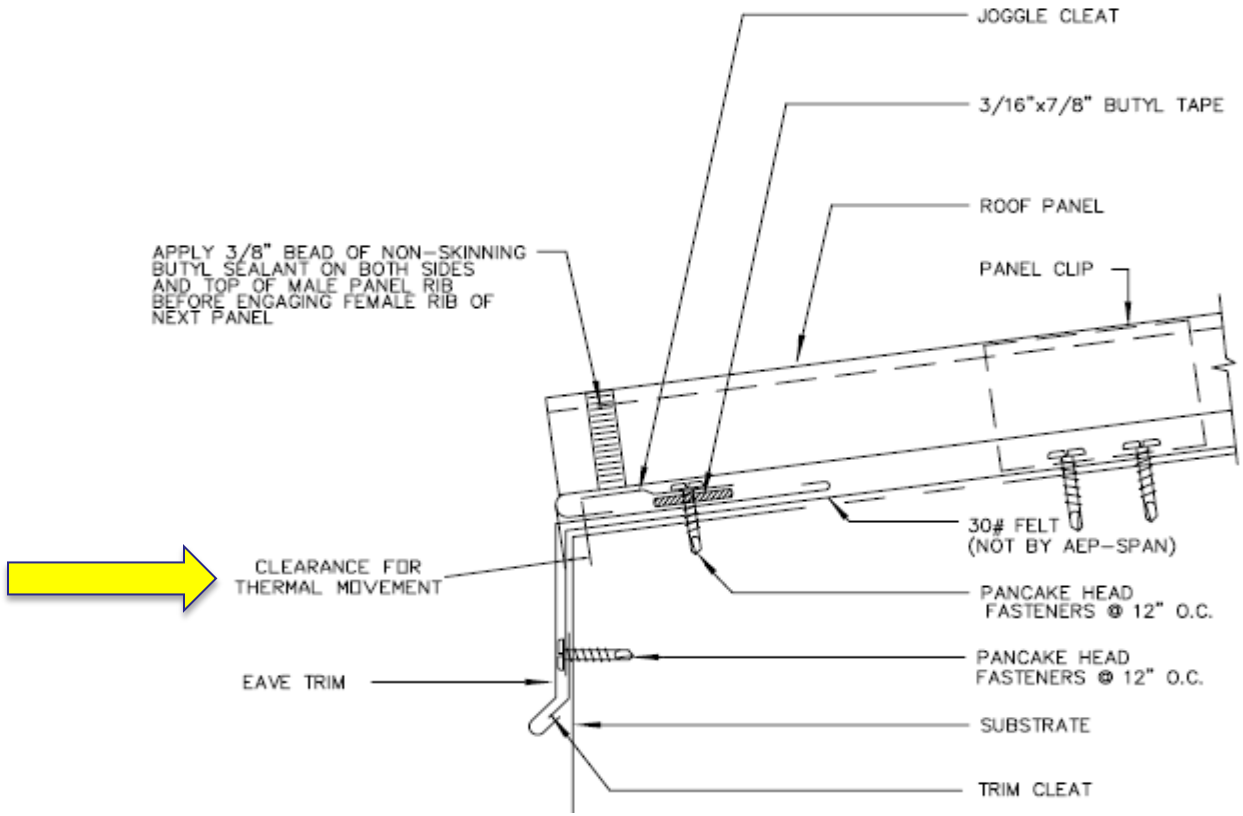

Designing to Accommodate Movement

Correct eave detail is critical for the long-term success of the roof installation.

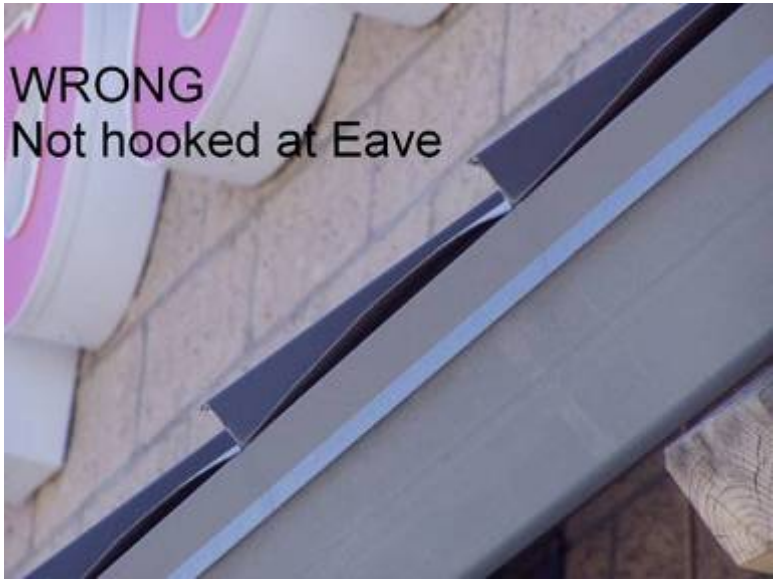

Designing to Accommodate Movement

A knee joint is used to cover the cut vertical panel rib of a standing seam roofing panel that transitions onto the fascia in one continuous piece.

Design Caution:
- Snow and ice will tear a knee cover off, so they should not be used in snow areas
- Turning panels down for fascia may establish unwanted point of panel fixity

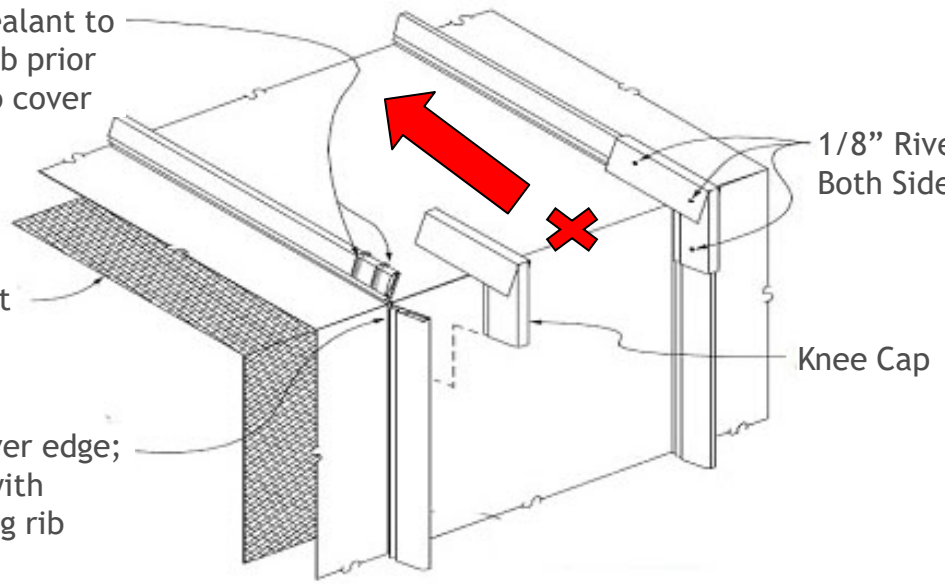

Designing to Accommodate Movement

- Knee joint installation photo

Designing to Accommodate Movement

- Care must be taken when utilizing knee joints in roof to fascia transitions, as this detail may establish an unwanted point of panel fixity.
- This detail should not be utilized in climates where snow accumulation may occur.

Image of failed knee joint in snow country.

Designing to Accommodate Movement

- A floating ridge or peak is required if the eave is fixed.

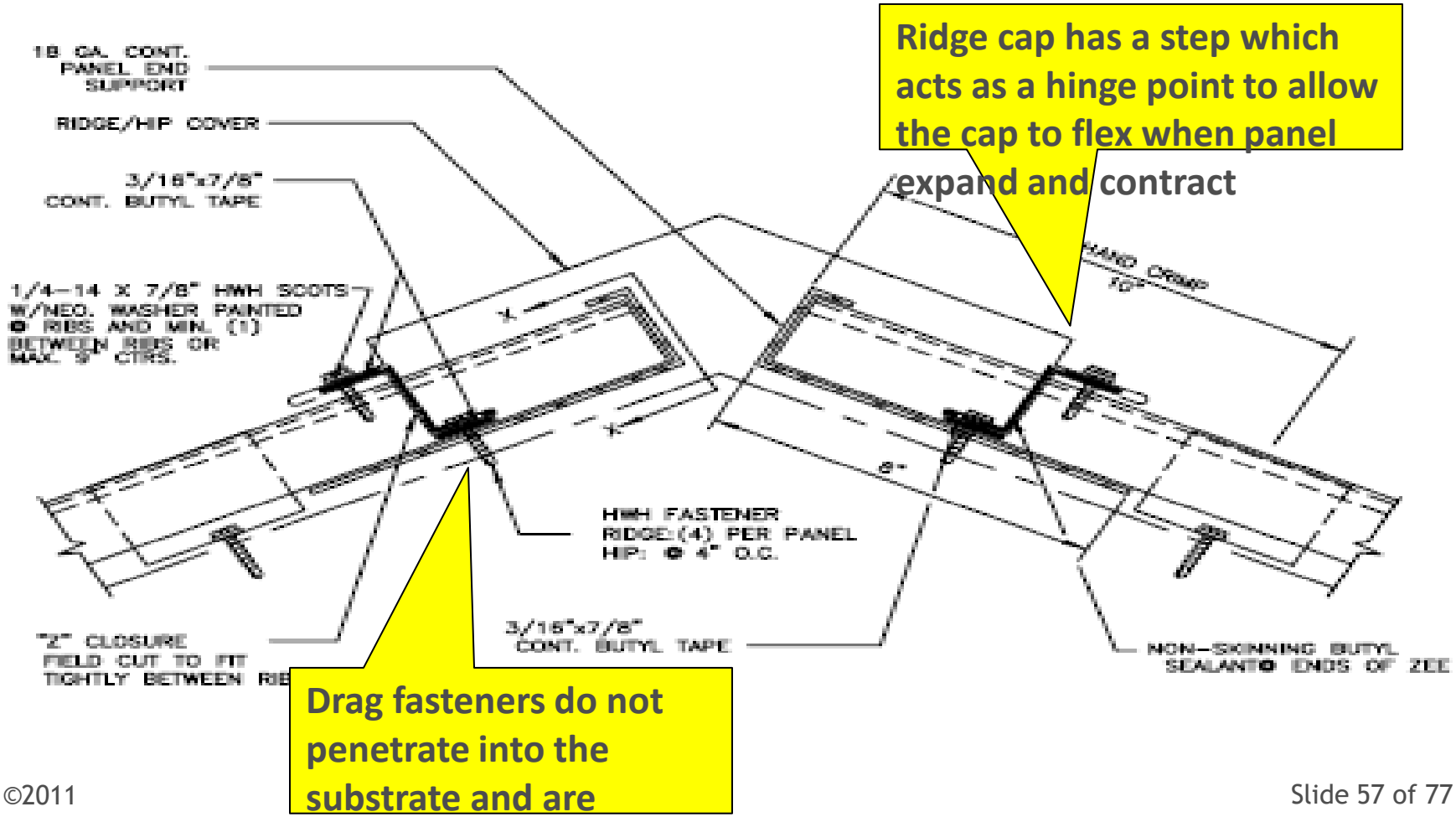

Designing to Accommodate Movement

For longer roof runs, a fixed panel lap or fixed mid point may be utilized. Fixing a panel mid span requires both a floating ridge and floating eave.

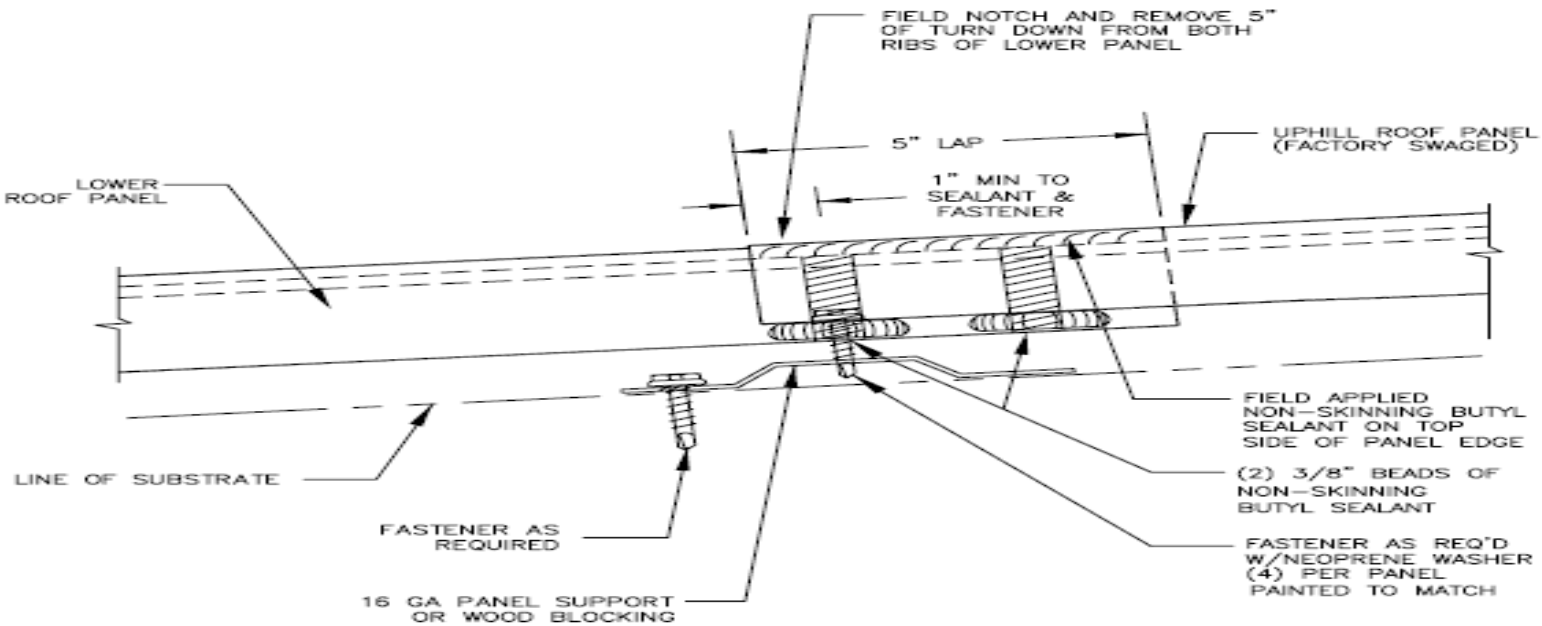

Designing to Accommodate Movement

Designing to Accommodate Movement

Fixed clip detail is utilized for continuous, long length application without a lap.

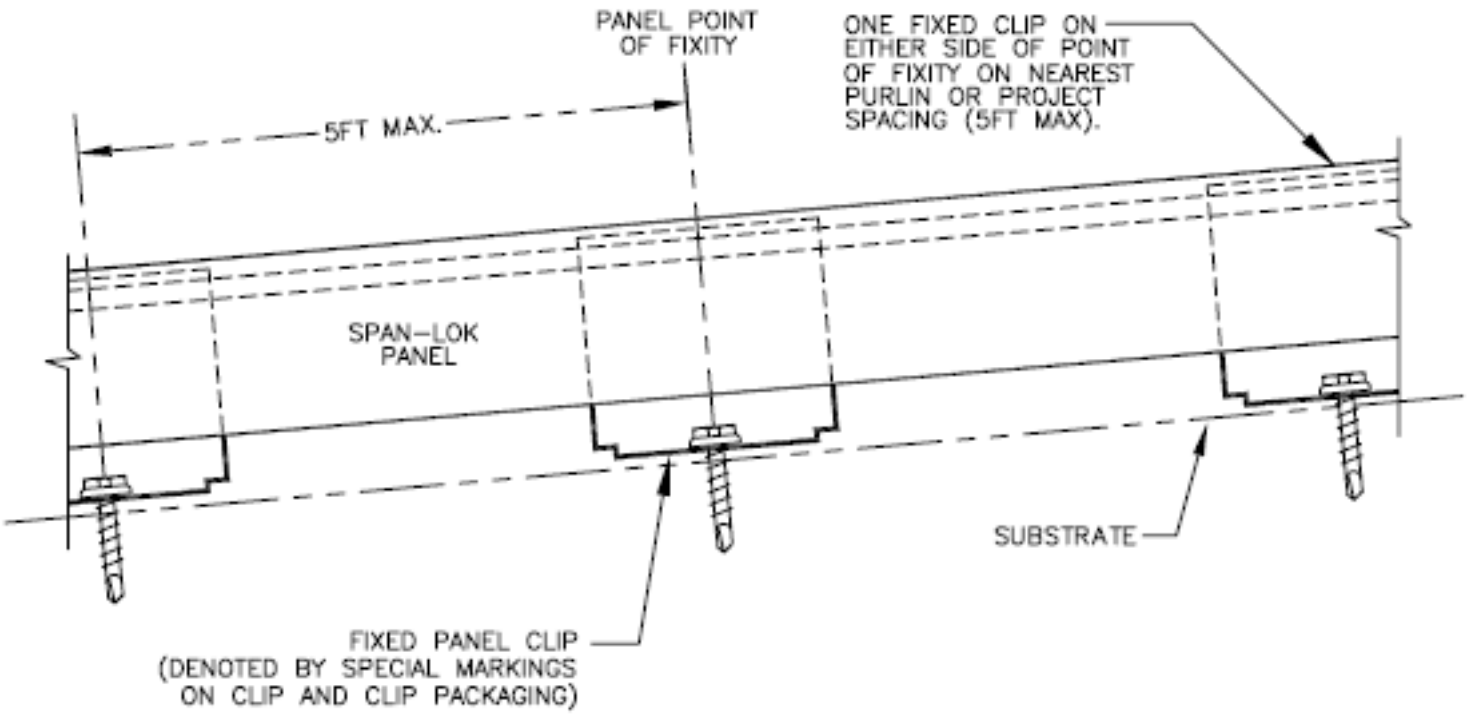

Designing to Accommodate Movement

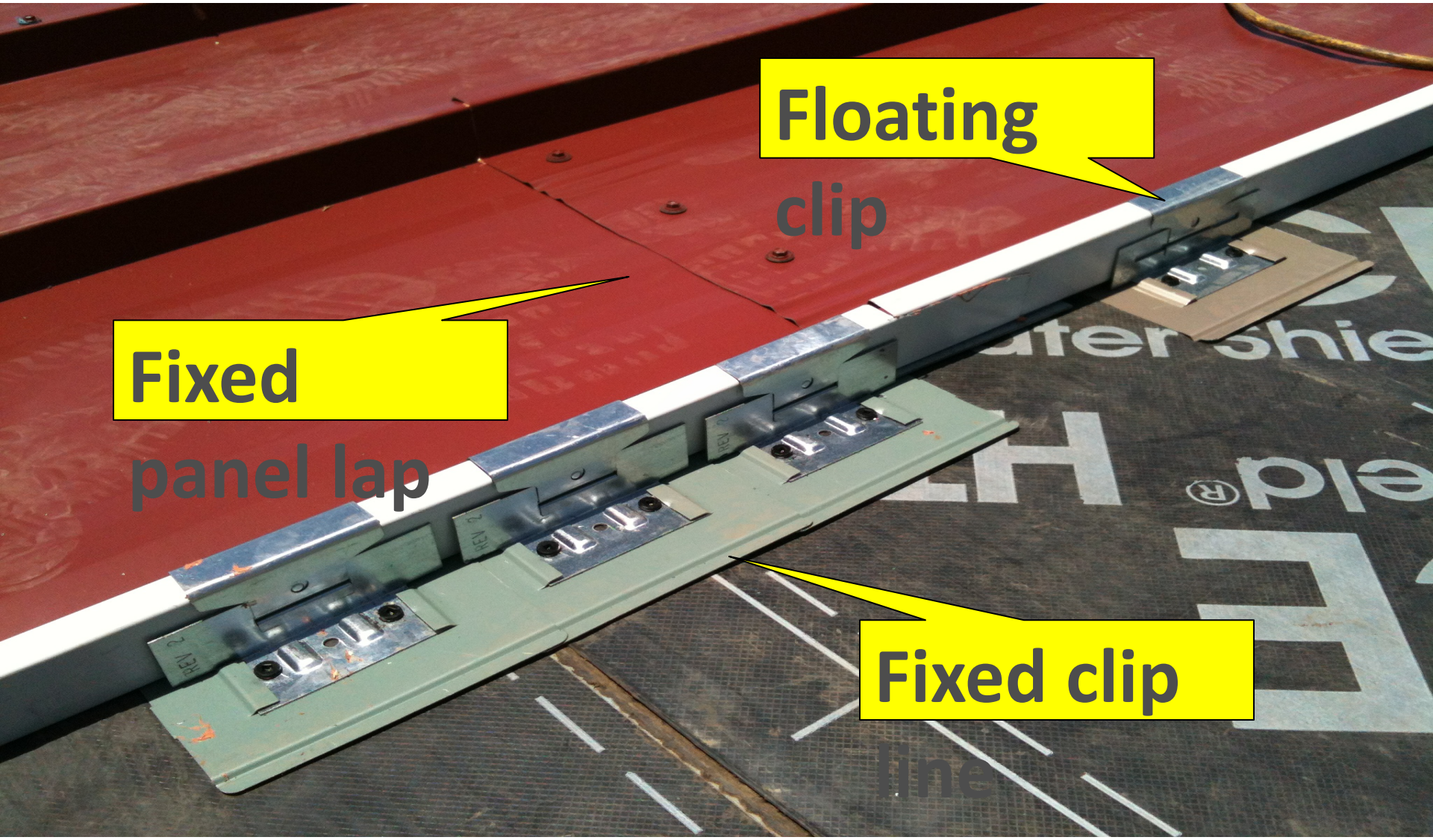

Designing to Accommodate Movement

Fixed clip details are also utilized for radius applications to fix or pin the apex of a radius and allow expansion and contraction to both eaves.

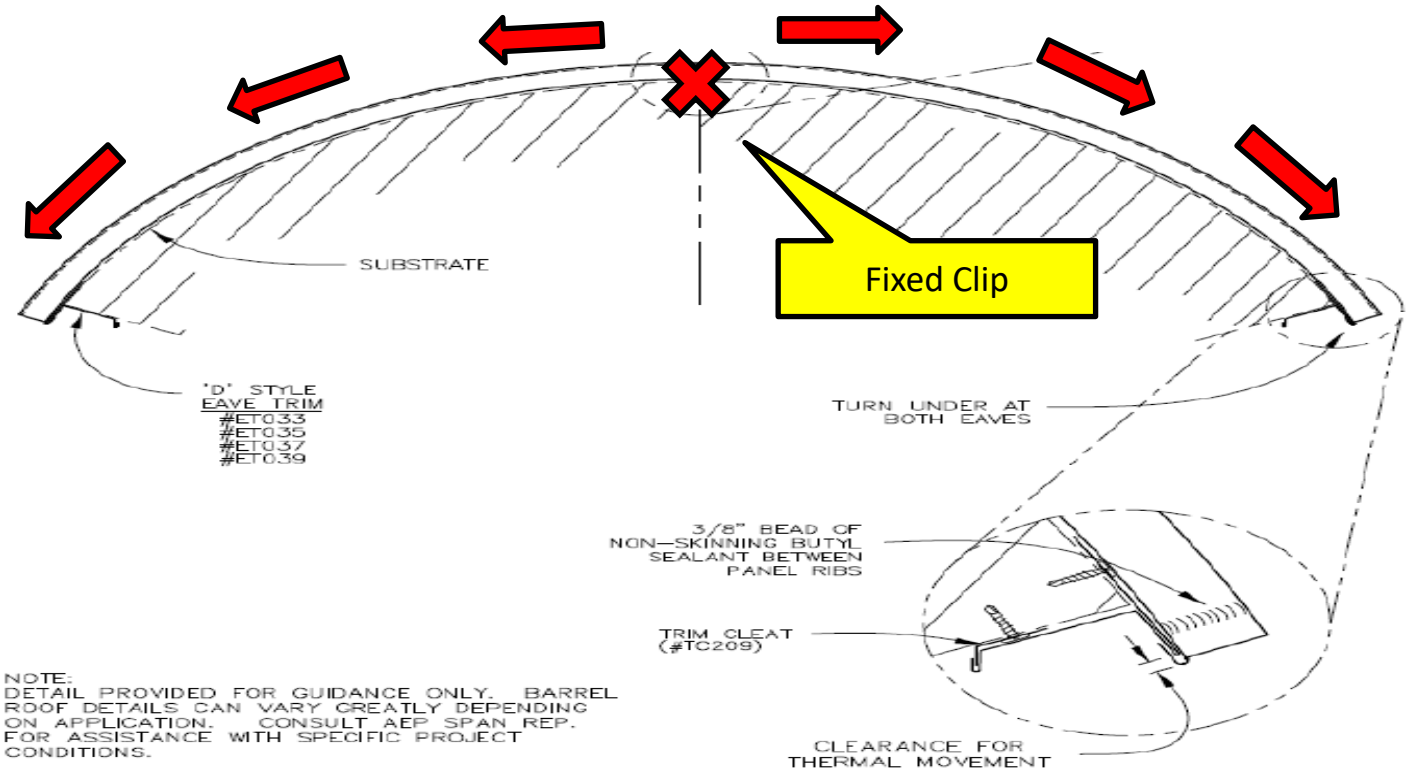

Designing to Accommodate Movement

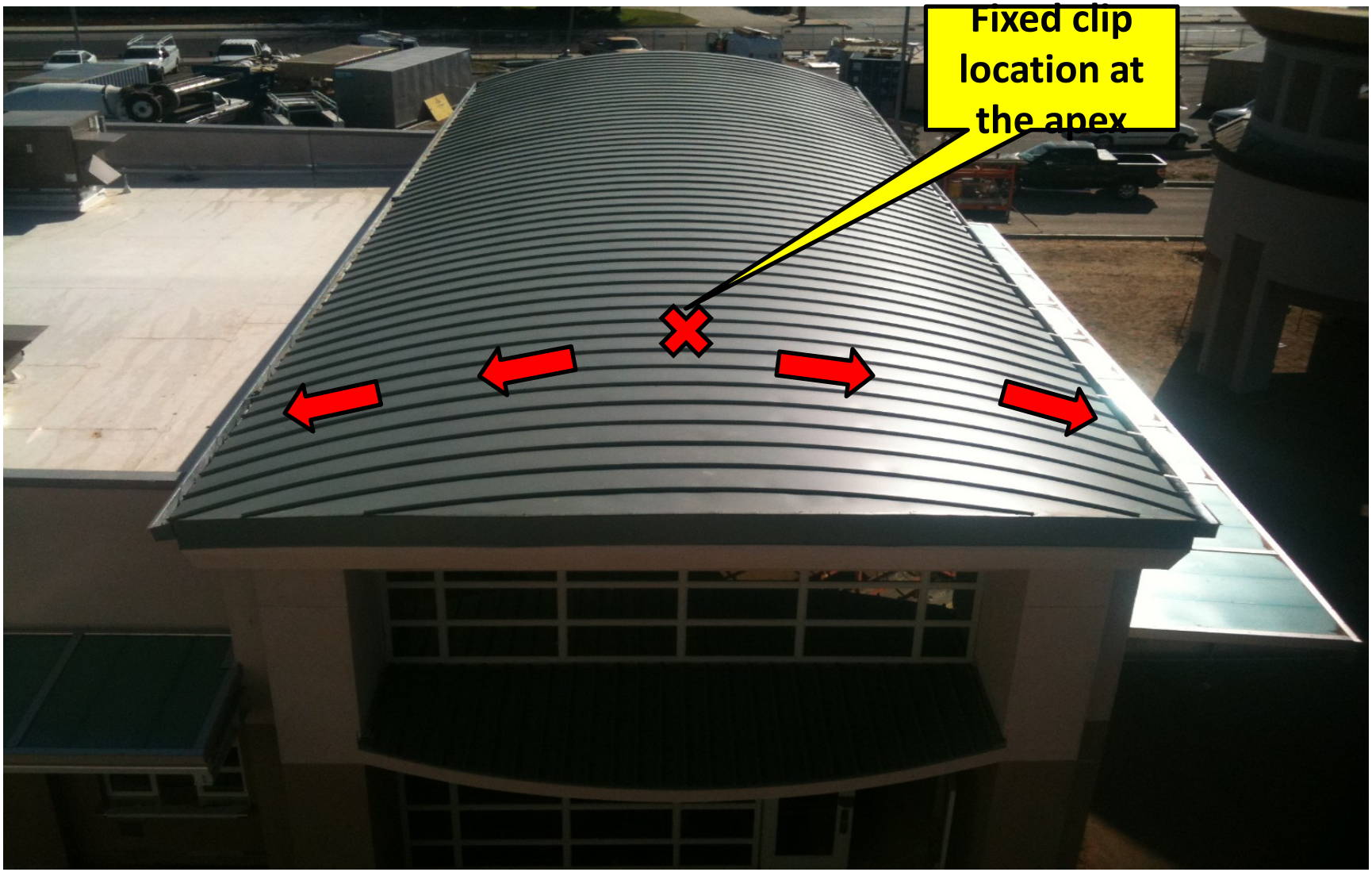

Designing to Accommodate Movement

Varying panel width and thermal movement must be considered when detailing full length roof panels at the gable ends of a building.

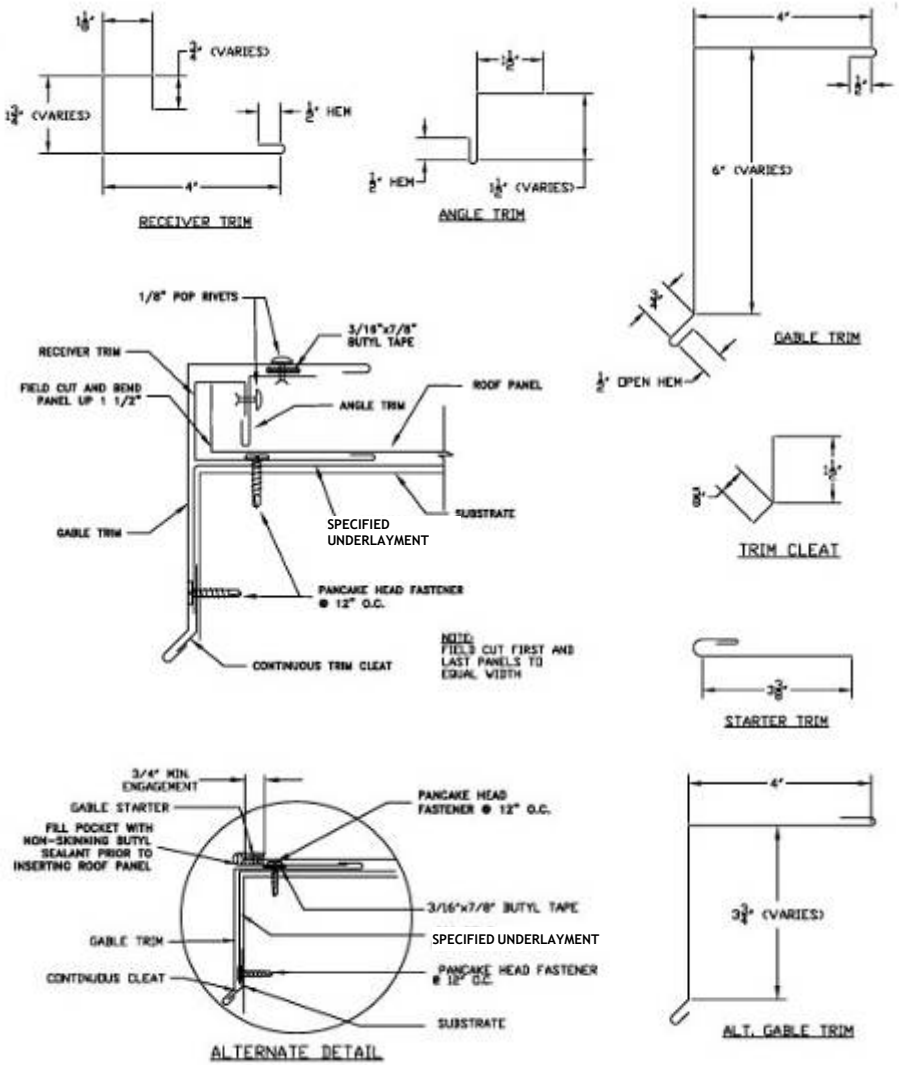

Drag Load

The intensity of the drag load is a function of:

- the slope of the roof
- the length of the panels
- the loads involved

Snow and ice imparts a live load, consequently, installations in cold and high altitude climates have important design considerations.

Damaged panels caused by snow drag load.

Cold Climate Design

- Designers may need to address ice dam formation in cold climates.
- Cold roof systems may be the best for preventing ice dam formation. Cold roof designs ventilate the panel from below with an air gap between the panel and substrate
- Generally, in heavy snowfall areas you usually want to design as steep a roof pitch as possible and consider a self-adhered underlayment.
- If possible, valleys, gutters, roof elevation changes and penetrations should be minimized/eliminated in snow areas.

Snow Retention Devices

- Roof ice melt systems can be incorporated to reduce ice dam formation not remedied by design, especially in those areas more susceptible to build up.
- Metal roof manufacturers recommend roof designs that limit the need for snow retention devices that may place unintended loads on the roof surface or structure.
- When snow retention devices are required, it is important the snow retention device manufacturer engineer the connection and quantity of retention devices based on the expected site specific loads.

Snow Retention Devices

Snow retention devices should be clamp-on set screw type with no penetrations.

Wide Valley Design

Valleys in snow areas require special consideration due to the accumulation of snow and ice from tributary roof areas.

Ribs crushed due to inadequate valley width.

Snow conditions require special valley design.

Pipe Boot Detail

Pipe boot detail, often used at a roof penetration, should ideally be located in the middle of the metal roof pan or centered on the rib.

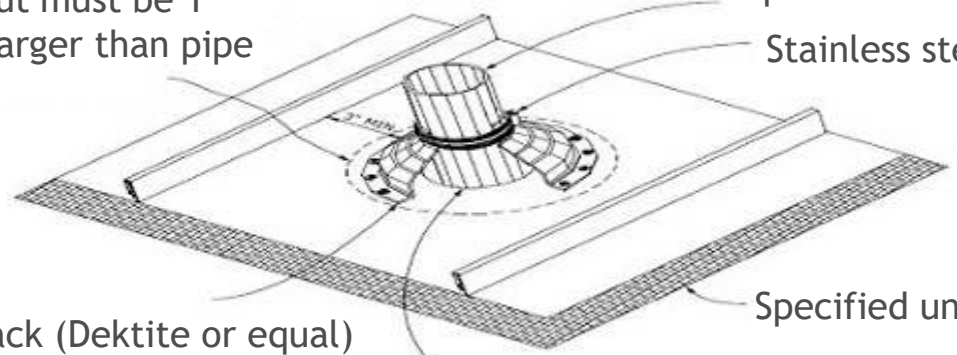

Cut Rib Detail

Cut rib home plate details should be used on all penetrations that come up through or near a vertical panel rib of a standing seam metal roof.

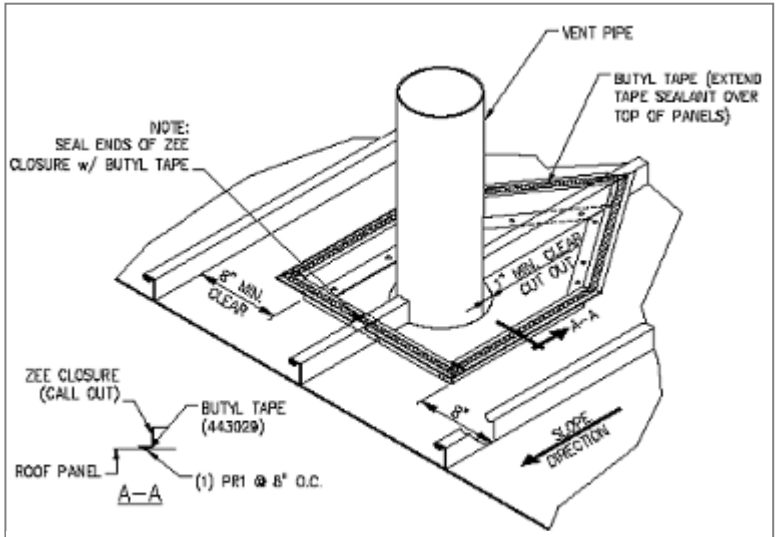

Zee Closure Installation

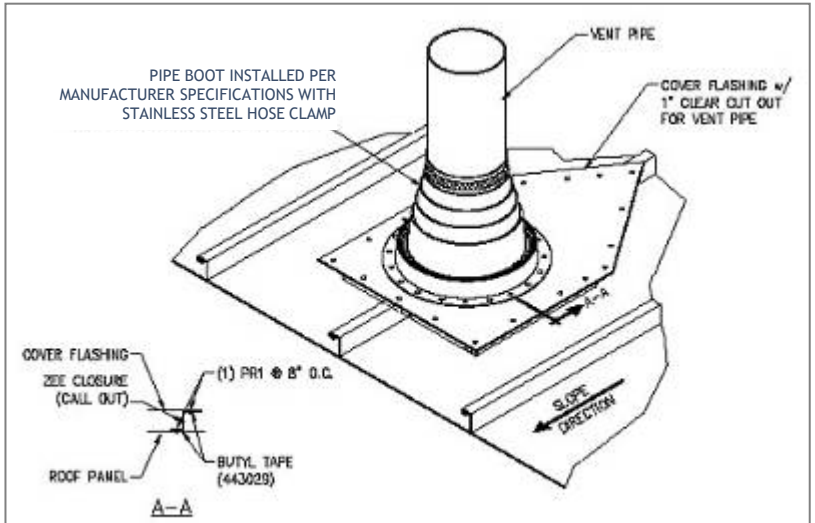

Flashing and Pipe Boot

Cut Rib Detail

Incorrect: Standing Seam Penetrated

Correct: Cut Rib Detail

Pipe Boot Detail

- Care should be taken when installing the pipe boot.
- The boot must be attached to the panel only and not fixed to the roof substrate.
- The hole in the substrate must be cut large enough to allow the fasteners for the boot to go through the panel, but not the substrate.

Drag load on pipe penetration. Pipe needs to be secure from underneath.

Roof Curbs

Whenever the penetrations are large or multiple, a curb is the correct solution.

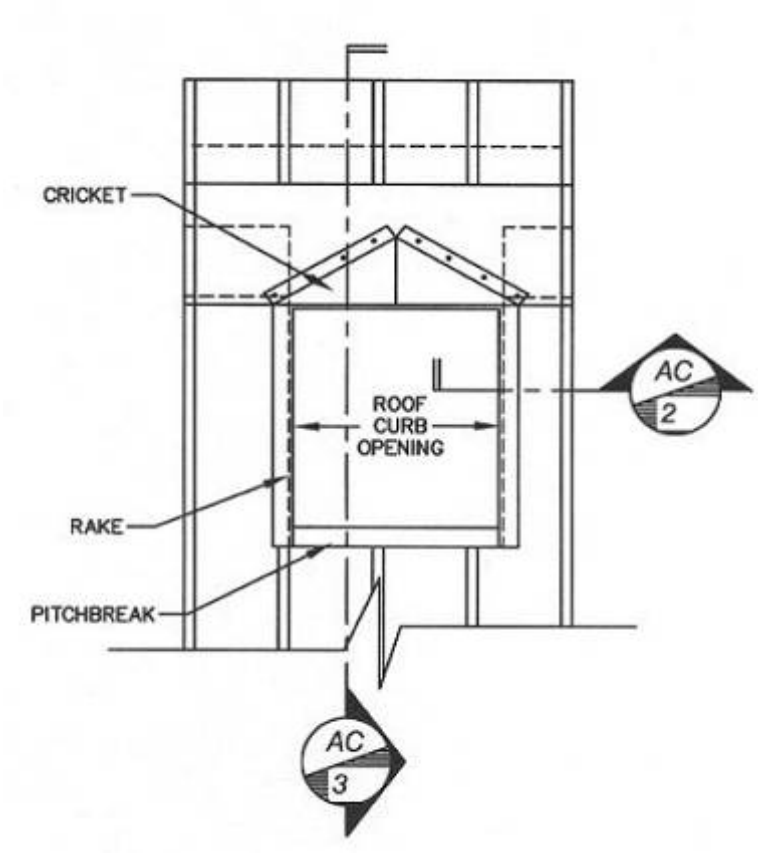

Roof Curbs

- Curbs are utilized for a varying array of roof top equipment such as skylights, solatubes, HVAC equipment, and ventilators.
- Curbs allow for large equipment to be installed and still allow the panels to expand and contract around them.

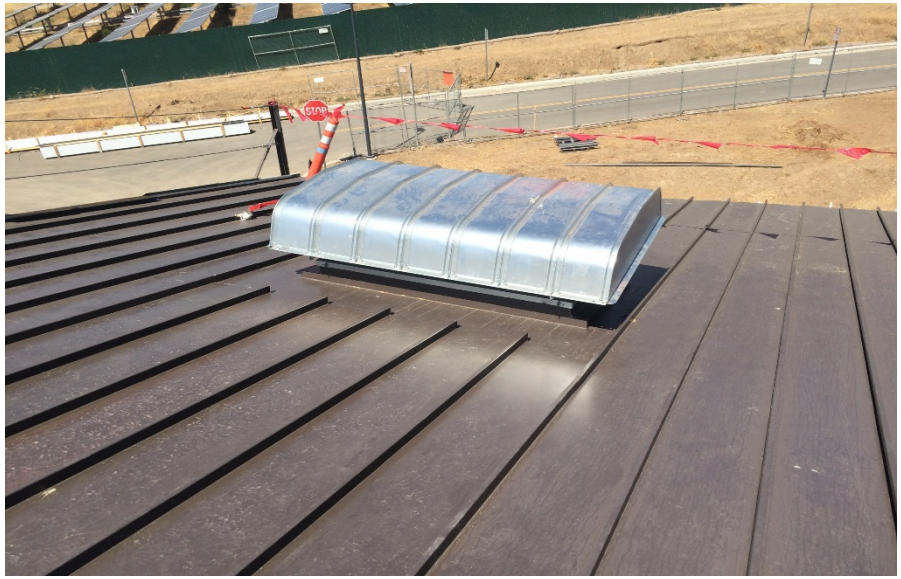

Course Evaluations

In order to maintain high-quality learning experiences, please access the evaluation for this course by logging into CES Discovery and clicking on the Course Evaluation link on the left side of the page.

Thank you for your time.

Questions?

This concludes The American Institute of Architects Continuing Education Systems Course

www.aepspan.com